Professional Garage Equipment Supplier

LIFT TECHNOLOGY & GARAGE EQUIPMENT

INSTRUCTION MANUAL FOR USE AND MAINTENANCE

MAGIC 3.5/4T

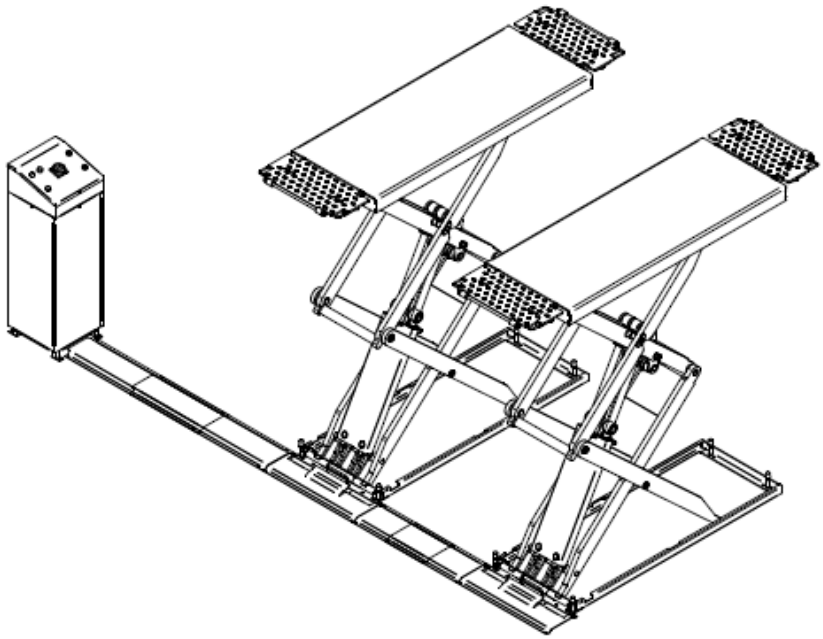

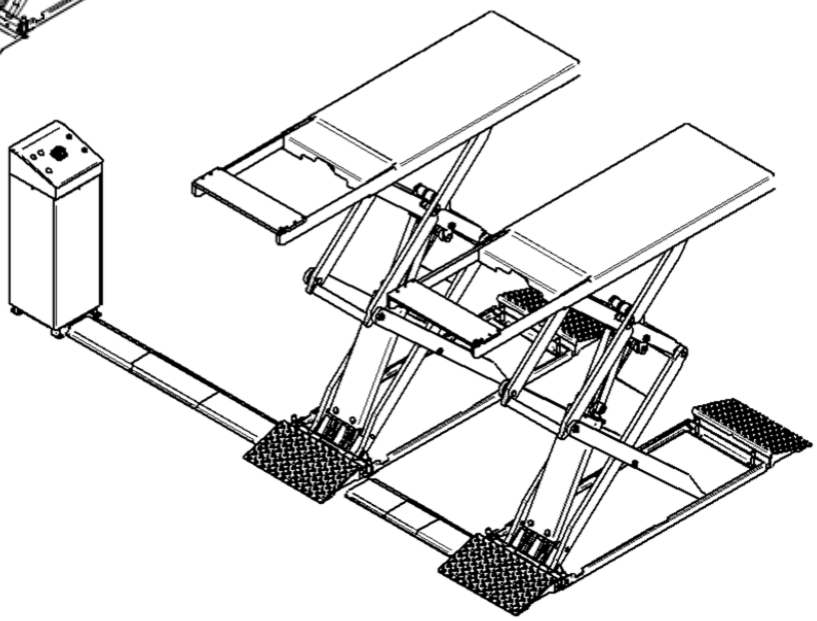

CE

Cod. 180-3701

0 CONTENTS

0 CONTENTS 2
1 INTRODUCTION 4
1.1 PURPOSE OF THE INSTRUCTION MANUAL FOR USE AND MAINTENANCE 4
1.2 HOW TO READ THE INSTRUCTION MANUAL 4
1.3 CONSERVATION OF THE INSTRUCTION MANUAL 4
1.4 METHODOLOGY FOR UPDATING THE INSTRUCTION MANUAL 4
1.5 RECIPIENTS 5
1.6 GLOSSARY AND PICTOGRAMS 5
1.7 PICTOGRAMS 5
1.7.1 PICTOGRAMS RELATING TO THE OPERATOR'S QUALIFICATION 6
1.7.2 PICTOGRAMS RELATING TO THE STATUS OF THE LIFT 6
1.7.3 PICTOGRAMS ON THE MACHINE 6
1.8 CONVENTIONS 6
2 GENERAL INFORMATION 8
2.1 MANUFACTURER'S IDENTIFICATION DATA 8
2.2 TECHNICAL DATA 8
2.3 MAIN PARTS DEFINITION 9
2.4 IDENTIFICATION DATA AND PLATES OF THE LIFT 11
2.5 DECLARATIONS 11
2.5.1 EC DECLARATION OF CONFORMITY - Annex II A Dir. 2006/42/EC 12
2.6 TECHNICAL SAFETY STANDARDS 13
2.7 PROHIBITION OF TAMPERING 13
2.8 INFORMATION ON TECHNICAL ASSISTANCE 13
2.8.1 EXCLUSIONS AND LIMITATIONS 13
3 SAFETY 14
3.1 GENERAL SAFETY WARNINGS 14
3.1.1 GENERAL REQUIREMENTS 15
3.1.2 CHECKS 15
3.2 INTENDED USE 16
3.3 CONTRAINDICATIONS FOR USE 16
3.4 DANGEROUS AREAS AND RESIDUAL RISKS 16
4 INSTALLATION 18
4.1 GENERAL 18
4.2 TRANSPORT AND HANDLING 18
4.3 STORAGE 19
4.4 OPENING THE PACKAGING 19
4.5 INSTALLATION 19
4.5.1 INSTALLATION AREA 19
4.5.1.1 CHOICE OF THE WORK AREA 19
4.5.1.2 ILLUMINATION OF THE WORK AREA 19
4.5.1.3 GROUND FIXING 19
4.6 CONNECTIONS 20
4.6.1 CONNECTION TO THE HYDRAULIC SYSTEM 20
4.6.2 CONNECTION TO THE ELECTRICAL SYSTEM 21
4.6.3 FLAP ASSEMBLY 21
4.7 PRELIMINARY CHECKS 21
4.8 TESTS WITHOUT LOAD 22
4.9 TESTS WITH LOAD 22

5 LIFT DESCRIPTION 23
5.1 PRINCIPLE OF OPERATION 23
5.2 IDENTIFICATION OF MAIN COMPONENTS 23
5.3 COMMAND IDENTIFICATION 23
5.4 ENVIRONMENTAL CONDITIONS 24
5.5 LIGHTING 24
5.6 SOUND EMISSIONS 24
5.7 STANDARD SUPPLY 24
6 USE OF THE LIFT 25
6.1 USE 25
6.1.1 VEHICLE PREPARATION 25
6.1.2 LIFT 25
6.1.3 PARKING 25
6.1.4 DESCENT 26
6.2 LEVEL OF PLATFORMS 26
6.3 MANUAL AND EMERGENCY DESCENT 26
7 MAINTENANCE 27
7.1 LIFT ISOLATION 27
7.2 SAFETY MEASURES 27
7.3 ORDINARY MAINTENANCE 27
7.3.1 CLEANING 28
7.3.2 LUBRICATION 28
7.3.3 CHECK THE LEVEL AND REPLACE THE HYDRAULIC OIL 28
7.4 EXTRAORDINARY INTERVENTIONS AND MAINTENANCE 29
8 TROUBLESHOOTING 30
9 ADDITIONAL INSTRUCTIONS 31
9.1 STORAGE 31
9.2 SCRAPPING 31
9.2.1.1 SAFETY INSTRUCTIONS - HANDLING 31
9.2.1.2 SAFETY INSTRUCTIONS - TRANSPORT 31
9.2.1.3 SAFETY INSTRUCTIONS – STORAGE 31
10 ATTACHMENTS 32
10.1 FUNCTIONAL DIAGRAMS 32
10.1.1 WIRING DIAGRAM 400V/230V 3PH 32
10.1.2 HYDRAULIC DIAGRAM 34
10.2 PNEUMATIC DIAGRAM 35
10.3 EXPLODED VIEW OF THE LIFT 35
10.4 FLAP ASSEMBLY 35

Revision matrix of the instruction manual and its parts

	Chapter										
Revision	1	2	3	4	5	6	7	8	9	10	
Manual Revision	0	1	2								
Date	03/06/2024	16/12/2024	19/03/2025								

1 INTRODUCTION

1.1 PURPOSE OF THE INSTRUCTION MANUAL FOR USE AND MAINTENANCE

This Instruction Manual is an integral part of the lift and is intended to provide all the information necessary for:

- The correct sensitization of operators to safety issues;
- The handling of the lift, packed and unpacked in safe conditions;
- Correct installation of the lift;
- The in-depth knowledge of its functioning and its limits;
- Its correct use in safe conditions;
- Carry out maintenance operations correctly and safely;
- Dismantle the lift in safe conditions and in compliance with the regulations in force to protect the health of workers and the environment.

The persons in charge of the places where this machine will be used are obliged, according to the regulations in force, to carefully read the contents of this Instruction Manual and to have it read by the operators and maintenance technicians involved, for the parts that fall within their competence. The time taken for this purpose will be largely rewarded by the correct functioning of the lift and its use in safe conditions.

This document assumes that in the places where the machine has been destined, the current safety and hygiene regulations in force are observed.
The instructions, drawings and documentation contained in this Manual are of a confidential technical nature, strictly owned by the Manufacturer and may not be reproduced in any way, either in full or in part.
The Customer is also responsible for ensuring that, should this document be modified by the Manufacturer, only the updated versions of the Manual are present in the points of use.

1.2 HOW TO READ THE INSTRUCTION MANUAL

The Manual has been divided into independent chapters, each of which is aimed at a specific employee (Installer chap.4, Operator chap. 6and Maintenance chap.7), for which the skills necessary to operate on the lift in safe conditions.
The sequence of chapters responds to the temporal logic of the lift's life.
To facilitate the immediacy of understanding the text, terms, abbreviations and pictograms are used, the meaning of which is indicated in par.1.6.

1.3 CONSERVATION OF THE INSTRUCTION MANUAL

The Instruction Manual must be kept with care and must accompany the lift in all changes of ownership that the same may have in his life.
Preservation must be favored by handling it with care, with clean hands and not depositing it on dirty surfaces.
They must not be removed, torn or arbitrarily modified of the parts.
The Manual must be filed in an environment protected from humidity and heat and in the immediate vicinity of the lift to which it refers.
The Manufacturer, at the request of the User, can provide additional copies of the lift's Instruction Manual.

1.4 METHODOLOGY FOR UPDATING THE INSTRUCTION MANUAL

The Manufacturer reserves the right to modify the design and make improvements to the lift without communicating it to the Customers, and without updating the Manual already delivered to the user. Moreover, in the event of modifications to the lift installed at the Customer's premises, agreed with the Manufacturer and which involve the modification of one or more chapters of the Instruction Manual, it will be the Constructor's responsibility to send to the owners of the Instruction Manual involved the chapters affected by the modification, with the new global revision model of the same.
It is the user's responsibility, following the instructions accompanying the updated documentation, to replace in all copies owned the old chapters with the new ones, the home page and the index with those with the new revision level.

1.5 RECIPIENTS

The Manual in question is aimed at: the Installer, the Operator and Qualified Personnel authorized to maintain the lift.
It is specified that "**OPERATOR**" means the personnel in charge of operating, adjusting, cleaning and carrying out routine maintenance on the lift.
With "**QUALIFIED PERSONNEL** or **QUALIFIED OPERATOR**" we mean those people who have followed specialization courses, training, etc. and have experience in the installation, commissioning and maintenance, repair, transport of the lift.
With "**EXPOSED PERSON**" we mean any person who is wholly or partially inside and/or near a Machine in which the presence of a person constitutes a risk to the safety, health or safety of that person.

Qualification of the recipients
The lift is intended for professional use and not generalized, so its use can be entrusted to qualified figures, in particular those who:

- Have reached the age of majority;
- Are physically and mentally fit to carry out work of particular technical difficulty;
- Have been adequately trained in the use and maintenance of the lift;
- Have been judged suitable by the employer to carry out the task entrusted to him;
- Are able to understand and interpret the operator's manual and safety requirements;
- They know the emergency procedures and their implementation;
- Possess the ability to operate the specific type of equipment;
- Are familiar with the specific rules of the case;
- Have understood the operating procedures defined by the lift manufacturer.

1.6 GLOSSARY AND PICTOGRAMS

This paragraph lists the terms that are not common or in any case with a meaning different from the common.
The abbreviations used, and the meaning of the pictograms used to indicate the operator qualification and the status of the lift, are explained below in the paragraph, their use allows you to quickly and uniquely provide the information necessary for the correct use of the lift in safe conditions.

DANGEROUS AREA: Area inside and/or near the lift in which the presence of an exposed person constitutes a risk to the safety and health of the person;
OPERATOR QUALIFICATION: Minimum level of skills that the operator must possess to carry out the described operation;
NUMBER OF OPERATORS: Number of operators adequate to perform the described operation in an optimal way and resulting from a careful analysis carried out by the Manufacturer;
LIFT STATUS: The status of the lift includes the operating mode, for example, automatic travel, hold-to-run control, stop, etc. the condition of the safety devices present on the lift such as guards included, guards excluded, emergency stop pressed, type of insulation of the energy sources, etc.
RESIDUAL DANGER: Danger that it has not been possible to eliminate or sufficiently reduce through the design, against which the protections are not (or are not totally) effective; the manual provides information on its existence and instructions and warnings to allow it to be overcome;
SAFETY COMPONENT: A component used to ensure a safety function and whose failure or malfunction jeopardizes the safety and/or health of exposed persons.

1.7 PICTOGRAMS

Descriptions preceded by this symbol ☞ contain:

☞	**Very important information / requirements, particularly regarding safety**

Failure to comply can result:

- **risk of accidents to people and operators;**
- **loss of the contractual guarantee;**
- **Manufacturer's disclaimer.**

Descriptions preceded by this symbol ⚠ contain:

	**Warnings which, if not observed, can lead to injury to persons or serious damage to property.They must always be respected.**

Failure to comply can result:

- **high risk of accidents to people and operators;**
- **high risk of damage to property or the environment;**
- **loss of the contractual guarantee;**
- **Manufacturer's disclaimer.**

1.7.1 PICTOGRAMS RELATING TO THE OPERATOR'S QUALIFICATION

Symbol	Description
	**Operator (or user):** operator without specific skills, assigned to the operation of the lift, able to perform simple operations.
	**Driver of lifting and handling means:** operator qualified to use means for lifting and handling materials and machines (carefully following the manufacturer's instructions), in compliance with the laws in force in the country of the lift user.
	**Mechanical maintenance technician:** qualified technician, able to operate the lift under normal conditions, to intervene on the systems to carry out the necessary adjustments, maintenance and repairs. **Typically he is not authorized to work on electrical systems in the presence of voltage.**
	**Electrical maintenance technician:** qualified technician, performs electrical maintenance interventions, preventive or on call for failure, and carries out assistance activities, in order to ensure the correct functioning of the machinery / systems.
	**Manufacturer's Technician:** qualified technician made available by the Manufacturer to carry out complex operations in particular situations or, in any case, as agreed with the user.

1.7.2 PICTOGRAMS RELATING TO THE STATUS OF THE LIFT

The pictograms contained in a square / rectangle provide INFORMATION.

Symbol	Status of the lift
	**Lift off:** with mechanical and electrical power supply disconnected, sectioned or deactivated; lift in stopped condition.
	**Connected lift:** with electrical and pneumatic power supply connected; lift in stopped condition.
	**Lift in motion:** with connected mechanical and electrical energy supply, active safety elements; lift in working condition.

1.7.3 PICTOGRAMS ON THE MACHINE

N	Symbol	Position	Danger	Instruction
1		Commands area	General	Read the "use and maintenance manual" before using the lift
3		Arms	Crushing hazard Upper limbs	Do not stand in the dangerous area during operation
5			Electric shock	Disconnect the lift from the mains during maintenance

N	Symbol	Position	Danger	Instruction
2		Lift	General	The lift must be used by people trained in its use
4		Arms	Crushing hazard Lower limbs	Do not stand in the dangerous area during operation
6		Lift	Instability	Check the compatibility of the vehicle characteristics and the lifting points

1.8 CONVENTIONS

In this manual, "right side", "left side", "forward", "back", "top", "bottom" are referred to the operator who sees the lift from the cylinder side.

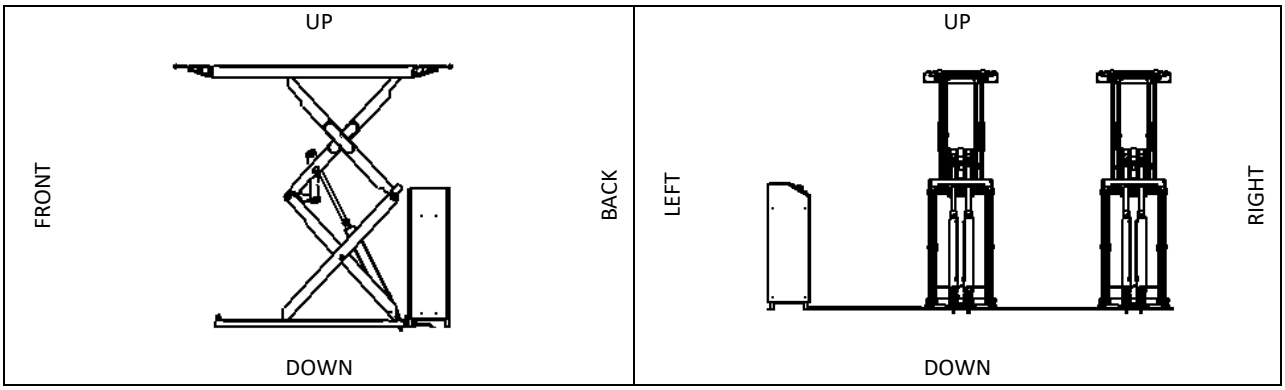

Picture1 - Conventions Views

In this manual the units of measurement are expressed in mm, kg and s, unless otherwise indicated.

2 GENERAL INFORMATION

2.1 MANUFACTURER'S IDENTIFICATION DATA

Manufacturer: **LTGE SRL**
Traversa di via Etiopia 3/8 – 65015 Montesilvano (PE) - Italy

2.2 TECHNICAL DATA

The main technical data of the lift for the purpose of this Manual are as follows:

Model	**DL 35 / 4 0 F**	**DL 35 / 4 0 E**	
Capacity	3500/4000		kg
Maximum lift height	1950/2030	1955/2035	mm
Minimum lift height	105	110	mm
Minimum length of platforms	1585	1596	mm
Maximum length of platforms	2173	2265	mm
Free width between the platforms standard	800		mm
Free width between the platforms approv. Dist.	700 - 1000		mm
Rise time	45		s
Descent time	45		s
Noisiness	< 82		dB(A)/1 m
Total weight of the lift	950 ~		kg
Operating temperature	-10 / +40		°C
Compressed air pressure (customer supplied)	6 / 8		bar

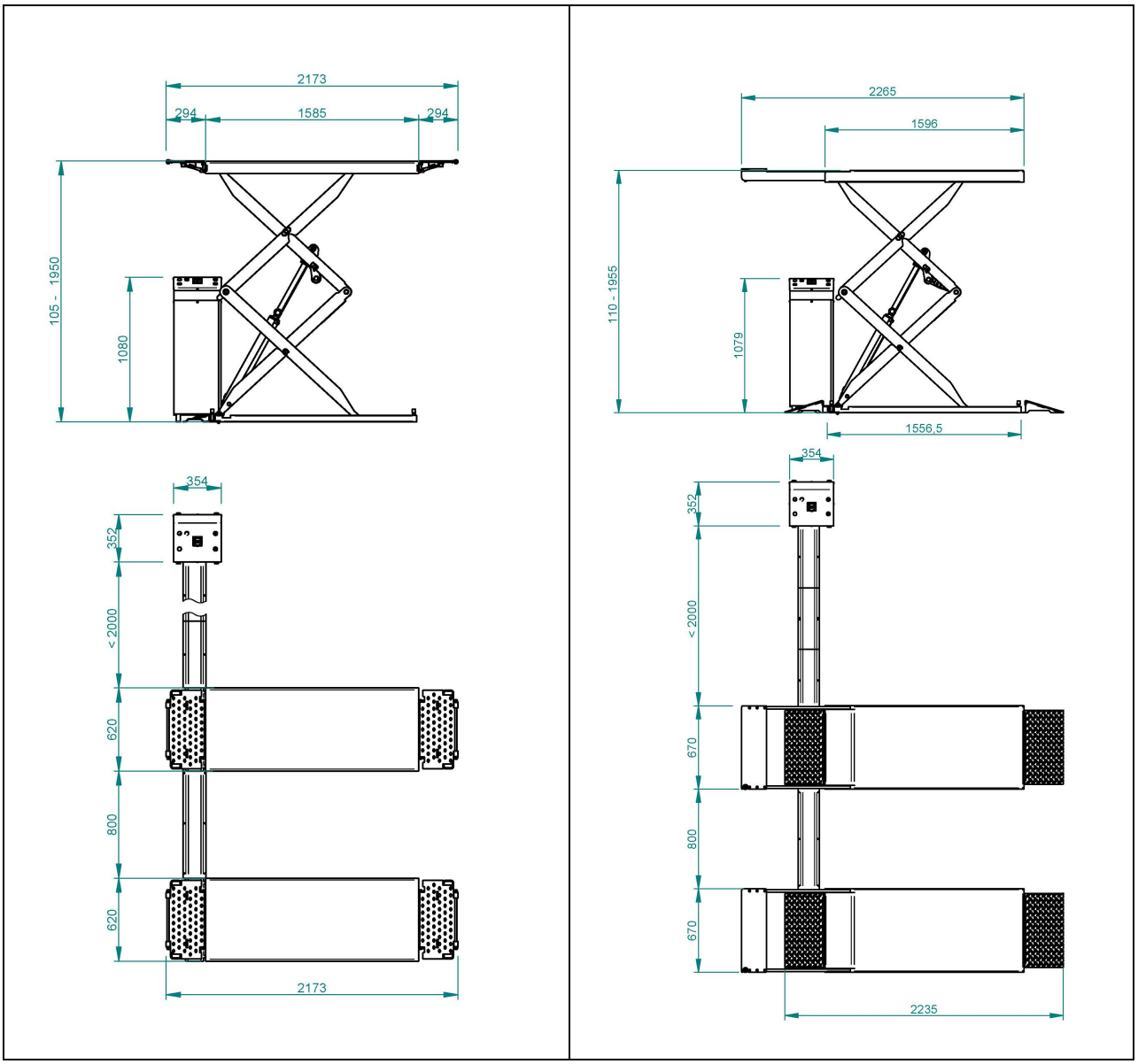

Picture2 - Layout

**Warning: measurements may vary due to project updates.*

2.3 MAIN PARTS DEFINITION

Descriptions of the main parts for each model are shown below.

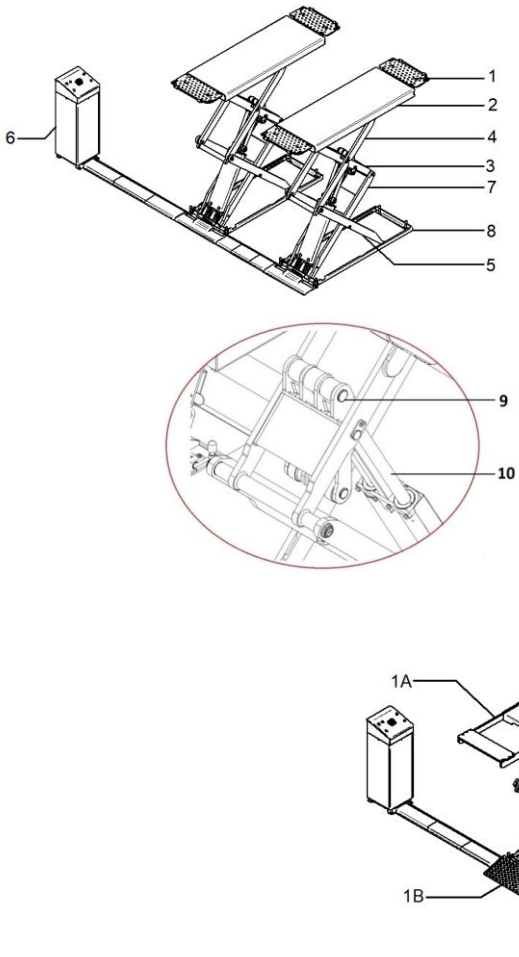

1	Flaps (3.5F models only)
1A	Extension (3.5E models only)
1B	Ramp (3.5E models only)
2	Platforms
3	Upper inner arm
4	Upper outer arm
5	Lower outer arm
6	Control unit
7	Lower inner arm
8	Base
9	Lever
10	Cylinders

Picture3 - Main components

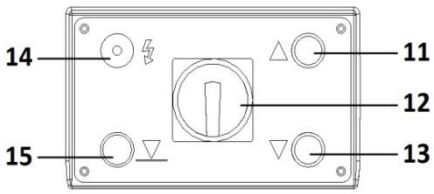

11	Up
12	Main / Emergency switch
13	Down
14	Power indicator
15	Final descent

Picture4– Commands

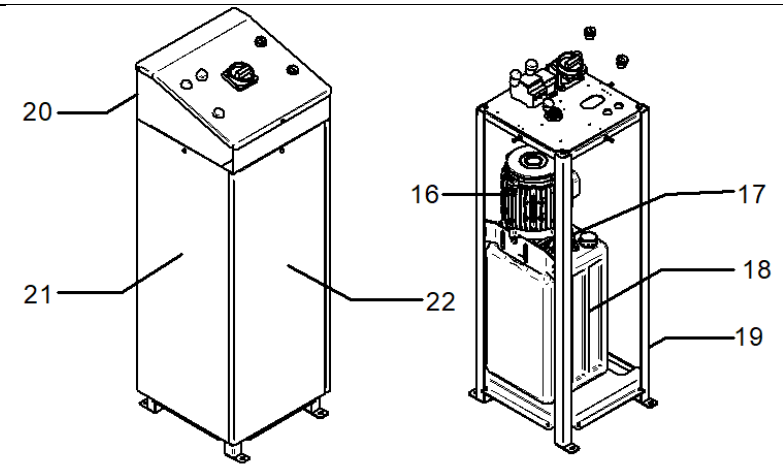

16	Electric motor
17	Hydraulic group
18	Tank
19	Chassis
20	Top cover
21	Back cover
22	Front cover

Picture5 - Control unit

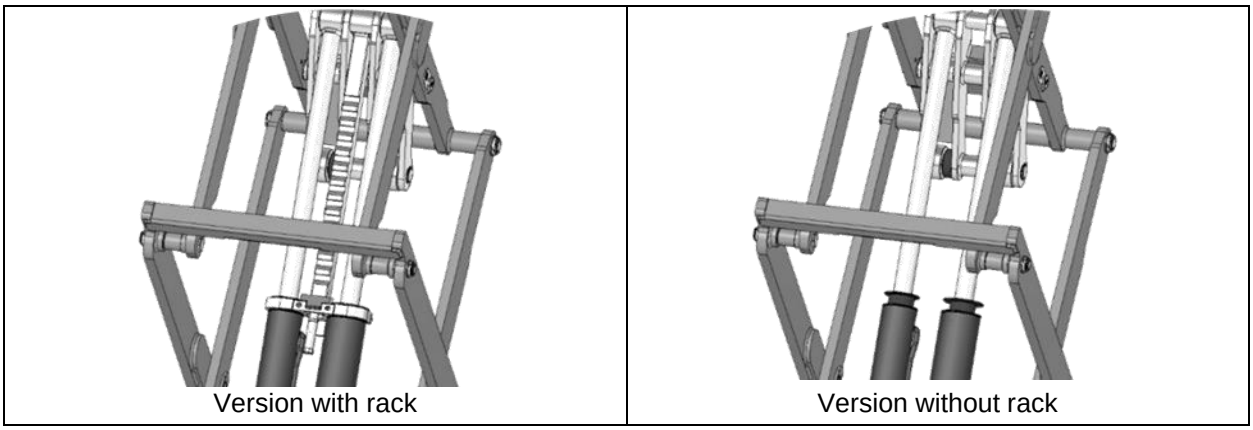

Picture 6 – Version with and without parking rack

2.4 IDENTIFICATION DATA AND PLATES OF THE LIFT

Each machine is identified by a CE plate on which the reference data of the machine are indelibly marked. For any communication with the Manufacturer, always quote these references.

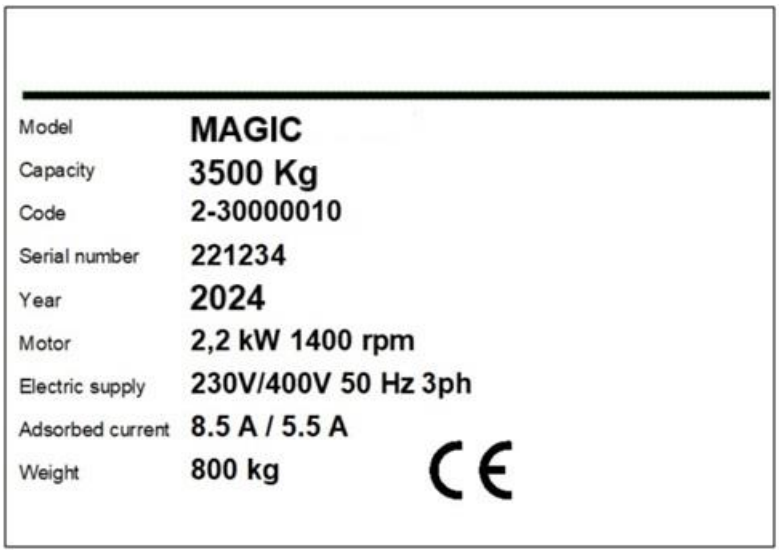

Picture7 - Example of the contents of the CE plate

The position of the license plate on the lift can vary. The size and shape of the plate can change.

2.5 DECLARATIONS

The lift is made in compliance with the relevant Community Directives applicable at the time of its placing on the market.
Returning to ANNEX IV of DIRECTIVE 2006/42/EC, the Manufacturer has taken steps to follow the EC Type Examination path for affixing the CE marking.

2.5.1 EC DECLARATION OF CONFORMITY - Annex II A Dir. 2006/42/EC

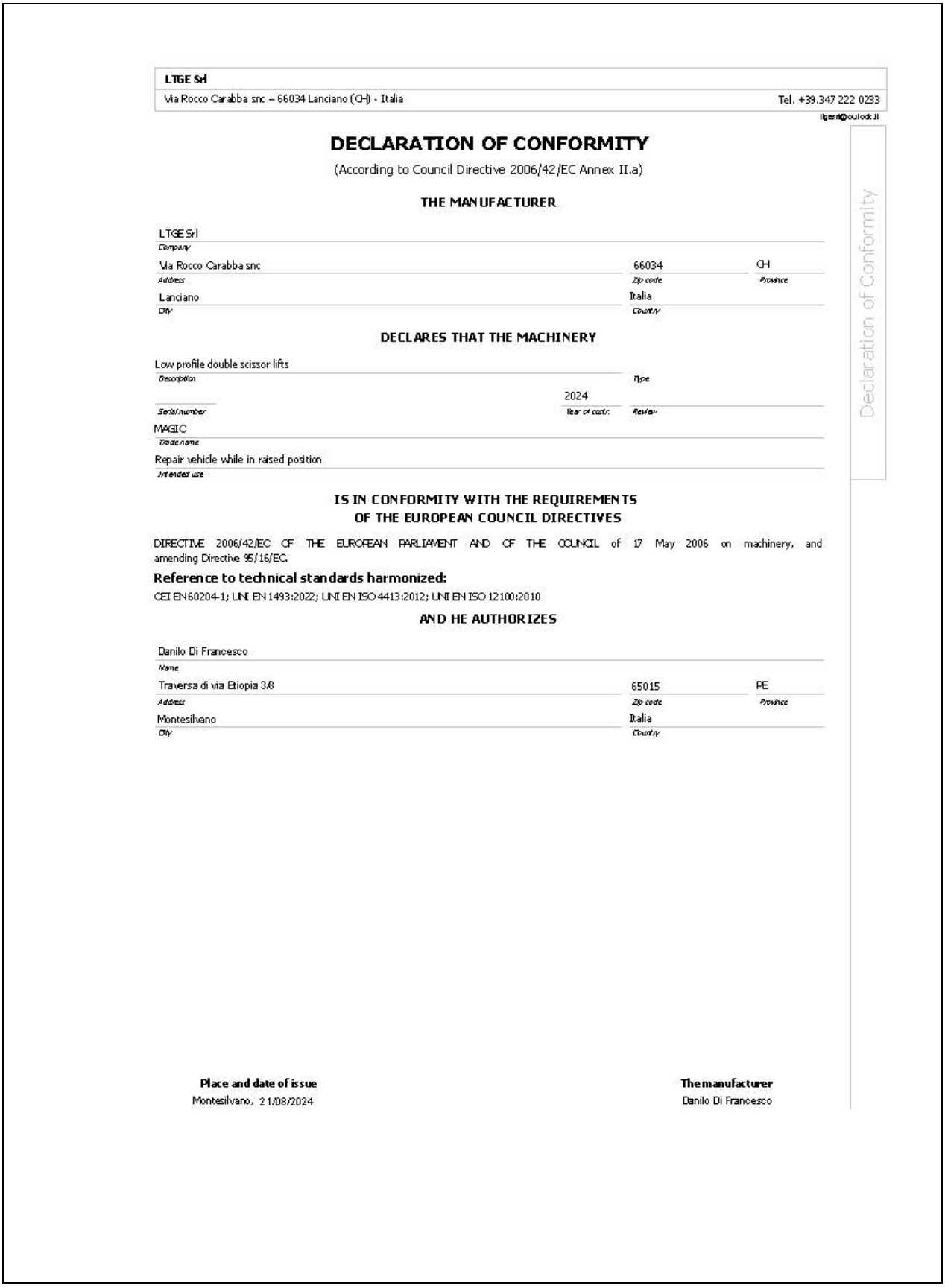

LTGE Srl
Via Rocco Carabba snc – 66034 Lanciano (CH) - Italia — Tel. +39.347 222 0233
ltgesrl@outlook.it

DECLARATION OF CONFORMITY

(According to Council Directive 2006/42/EC Annex II.a)

Declaration of Conformity

THE MANUFACTURER

LTGE Srl (Company)		
Via Rocco Carabba snc (Address)	66034 (Zip code)	CH (Province)
Lanciano (City)	Italia (Country)	

DECLARES THAT THE MACHINERY

Low profile double scissor lifts (Description)		(Type)
(Serial number)	2024 (Year of costr.)	(Review)
MAGIC (Trade name)		
Repair vehicle while in raised position (Intended use)		

IS IN CONFORMITY WITH THE REQUIREMENTS OF THE EUROPEAN COUNCIL DIRECTIVES

DIRECTIVE 2006/42/EC OF THE EUROPEAN PARLIAMENT AND OF THE COUNCIL of 17 May 2006 on machinery, and amending Directive 95/16/EC.

Reference to technical standards harmonized:

CEI EN 60204-1; UNI EN 1493:2022; UNI EN ISO 4413:2012; UNI EN ISO 12100:2010

AND HE AUTHORIZES

Danilo Di Francesco (Name)		
Traversa di via Etiopia 3/8 (Address)	65015 (Zip code)	PE (Province)
Montesilvano (City)	Italia (Country)	

Place and date of issue
Montesilvano, 21/08/2024

The manufacturer
Danilo Di Francesco

Picture8 – Example of Contents of the EC declaration of conformity

2.6 TECHNICAL SAFETY STANDARDS

The Machines referring to this Manual have been manufactured in compliance with the applicable requirements of the current **Harmonized Technical Standards** listed below:

UNI EN ISO 1493:2022	Vehicle lifts
UNI EN ISO 12100:2010	Safety of machinery - General principles for design - Risk assessment and risk reduction.
UNI EN ISO 4413:2012	Hydraulic fluid power - General rules and safety requirements for systems and their components
UNI EN ISO 4414:2012	Pneumatic fluid power - General rules and safety requirements for systems and their components

2.7 PROHIBITION OF TAMPERING

The lift cannot be put into service after having undergone constructive changes or additions to other components not included in ordinary or extraordinary maintenance, not expressly approved by the Manufacturer, without being declared compliant with the requirements of the directives mentioned in the declaration of conformity and with the regulations in force.

2.8 INFORMATION ON TECHNICAL ASSISTANCE

The machines are covered by a guarantee, as foreseen in the general conditions of sale. If, during the period of validity, malfunctions or breakdowns of parts of the lift occur, which fall within the cases indicated by the guarantee, the Manufacturer, after the appropriate checks on the lift, will repair or replace the defective parts.
Please note that modifications carried out by the user, without the explicit written authorization of the Manufacturer, invalidate the warranty and release the Manufacturer from any liability for damage caused by a defective product.
For all these reasons we advise our customers to always contact our Assistance Service.

2.8.1 EXCLUSIONS AND LIMITATIONS

They are excluded from any form of guarantee:

- Parts damaged during transport (if not done with the Manufacturer's vehicles and personnel);
- Parts subject to normal wear and tear of use.
- Failures and interventions caused by tampering by unauthorized personnel, neglect or inadequate maintenance.

The transport and assembly of the parts under warranty are the responsibility of the user.

3 SAFETY

3.1 GENERAL SAFETY WARNINGS

	**Before operating the lift, carefully read the instructions contained in this Manual and carefully follow the instructions contained therein.**

The manufacturer has made every effort to design this lift and as far as possible it has been made intrinsically safe.
The Manufacturer has also equipped the lift with all the protections and safety devices deemed necessary; finally, it has provided it with sufficient information for it to be used safely and correctly.
To this end, in each chapter, when necessary, for each human-lift interaction, the following information has been indicated:

- Minimum operator qualification required;
- Number of operators needed;
- Status of the lift;
- Residual dangers;
- Necessary or recommended personal means of protection;
- Prohibitions / obligations relating to reasonably foreseeable misconduct.

	**This information must be strictly observed.**

The user can conveniently integrate the information provided by the Manufacturer with additional work instructions, obviously not in contrast with what is reported in this Instruction Manual, to help ensure the safe use of the lift.
For example, you must pay close attention to the clothing that anyone who intervenes on the lift wears:

- Avoid the use of clothes with grips or elements that can remain hooked to parts of the lift;

Before operating the lift, carefully read the instructions contained in this Manual and carefully follow the instructions contained therein.
This information must be strictly observed.

When working, but especially having to carry out maintenance or repairs, the following safety clothing and material must <u>always</u> be used:

Overalls or other comfortable clothing, not too loose and without the possibility that parts of them can become entangled in moving parts.	
Protective gloves for the hands.	
Glasses and shield for eye and face protection.	
Safety shoes	

When necessary, the Manual will specify further recommendations by the user on prevention measures, personal means of protection, information to prevent human errors and prohibitions relating to unacceptable behavior that is reasonably foreseeable.

However, it is essential to diligently follow the following instructions:

- It is absolutely forbidden to operate the lift with the guards removed or not working;
- Reduced safety operations must be carried out in strict compliance with the indications provided in the relative descriptions;
- After a reduced safety operation, the status of the lift with active protections must be restored as soon as possible;
- Cleaning operations must be carried out with the power supply disconnected;

- Do not modify parts of the lift for any reason; in case of malfunction due to failure to comply with the above, the Manufacturer is not liable for the consequences. It is advisable to request any changes directly from the Manufacturer;
- Clean the lift covers, panels and controls with soft, dry cloths or slightly soaked in a mild detergent solution; do not use any type of solvent, such as alcohol or petrol, as the surfaces could be damaged;

	**IMPORTANT !**

The manufacturer is relieved of any responsibility for damage caused by the lift to people, animals or things in the event of:

- use of the lift by inadequately trained personnel;
- use with vehicles with characteristics not suitable for the lift;
- improper use of the lift;
- incorrect installation;
- deficiencies in planned maintenance;
- unauthorized modifications or interventions;
- use of non-original or non-specific spare parts for the model;
- coupling with machines, accessories, equipment, tools not authorized by the Manufacturer;
- total or partial non-compliance with the instructions;
- use contrary to specific national regulations;
- power supply defects;
- calamities and exceptional events.

3.1.1 GENERAL REQUIREMENTS

The moving elements must always be used according to the Manufacturer's prescriptions, as indicated in this Manual, which must always be available in the workplace.
All safety equipment (including pictograms) placed on the mobile elements to prevent accidents and safeguard safety cannot be modified or removed, but must be adequately safeguarded.
If necessary, the user must promptly inform the employer about any defects or anomalies presented by the moving elements (within 1 month from the occurrence of the defect / anomaly).

3.1.2 CHECKS

The checks on the lift must be carried out as indicated in this Instruction Manual.
If the worn or defective parts are not promptly replaced, the Manufacturer assumes no responsibility for any damage resulting from accidents.
The checks must be carried out by an expert; they must be visual and functional, with the aim of guaranteeing the safety of the lift.
They include:

- verification of all load-bearing structures, which must not show any cracks, breaks, damage, deformations, corrosion, wear or alteration with respect to the original characteristics;
- verification of all mechanical parts;
- check of all the safety devices installed on the lift;
- check of all connections with pins and screws;
- functional check and status of the lift;
- verification of the tightness and efficiency of the hydraulic system.

The results of this verification must be reported on a special form.

If the person carrying out the check finds any cracks or dangerous anomalies, he must promptly notify the manufacturer of the lift.
Put the lift out of service if any operating anomalies occur, providing for the appropriate checks and/or repairs.

	**NOTICE!** If anomalies are detected, these must be eliminated before restarting the machine, and the expert operator who carries out the check must note the repair on the appropriate sheet, thus giving the consent to use the lift.

In order to ensure maximum safety of the lift it is however FORBIDDEN:

- Tamper with any part of the lift;
- Use the lift working, but not in complete efficiency;
- Modify the lift to change the originally intended use, without the explicit authorization of the Manufacturer or without assuming full responsibility;

3.2 INTENDED USE

	**Operator (or user):** operator without specific skills, assigned to the operation of the lift, able to perform simple operations.

The lift has been designed for professional use and to be used exclusively in the field of mechanical workshops, tire specialists or similar sectors.
The lift is intended for use in closed, dry and covered areas. Do not expose the lift to rain, snow or high humidity.
The height of the ceiling must be sufficient (it must be at least the total height of the lifting platform, plus the raised vehicle).

Before starting to use the lift, the operator in charge must have read and understood the Instruction, Use and Maintenance Manual.
The operator must be of age and in good physical condition.
The autonomous use of the lift by apprentices and trainees is prohibited.
It is forbidden to use the lift in the vicinity, i.e. less than 50 m, in the presence of children under 14.
Maintenance may only be carried out within the limits of what is expressly indicated in the Manual.

	During maintenance operations, the use of products / materials other than those specified by the manufacturer can cause damage to the lift and dangerous situations for the operator and/or people close to the lift, and is therefore considered incorrect or improper.
	It is forbidden to carry out any installation, adjustment, use or maintenance operations in the presence of children and/or animals.
	It is forbidden to install any equipment on the lift, any accessory that is not expressly permitted by the lift manufacturer.

3.3 CONTRAINDICATIONS FOR USE

The lift must not be used:

- for uses other than those set out in par. 3.2
- for uses other than or not mentioned in this manual;
- in sectors other than vehicle maintenance and/or construction.
- using it with vehicles heavier than the nominal capacity of the lift.
- using it on uneven and not adequately compacted grounds.
- in environments at risk of fire and/or explosion.
- in movement.
- approaching moving parts in operation and with inappropriate work clothes.
- climbing on the lift, even when it is switched off, or using the lift to raise people or things (other than permitted vehicles).
- with safety devices excluded or not working.
- with electrical jumpers and/or mechanical means and/or modifications to the hydraulic system that exclude components/parts of the lift itself.
- coupling to the lift Equipment and/or Accessories not approved by the Manufacturer.

3.4 DANGEROUS AREAS AND RESIDUAL RISKS

For the safety of the operator and people, the dangerous area shown in Picture9 must be clear during ascent or descent.
The presence of the operator under the vehicle during work is allowed, only with the vehicle already raised and with the platforms stationary.
The figure below shows the control areas and the dangerous areas, i.e. with residual risks.

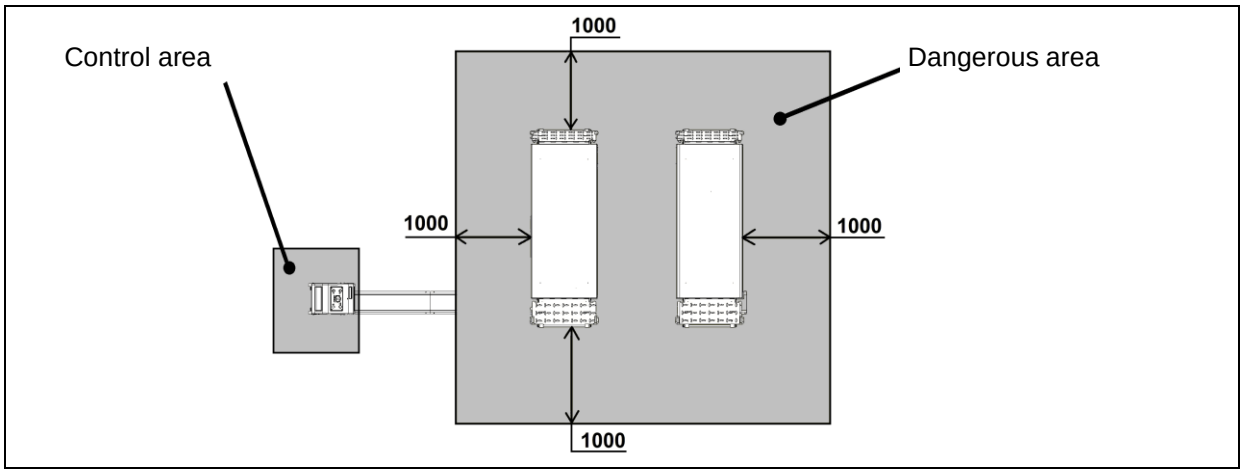

Picture9 - Lift areas

DEFINITION OF RESIDUAL RISK:
"Hazard not totally reducible through design and protection techniques, that is, potential hazard not evident"

It is necessary to pay attention to the following residual risks which are present when using the lift and which cannot be eliminated.
The risks that personnel can generally run due to incorrect use of the lift can be identified in the following:

Residual risks	***Location / area***	***Phase / cause***	***Action***	***Adhesive***
Danger of impact	Platforms, arms	Lift in motion	Do not stand in the dangerous area during operation	
Danger of overturning	Lift	Incorrect or excessive vehicle load	Check the compatibility of the vehicle characteristics and the lifting points	
Crushing hazard	Arms area	Lift in motion	Do not stand in the dangerous area during operation	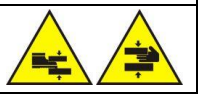
Ejection of pressurized fluid	Hydraulic system	Breakage of hydraulic component		
Electrical risk	Control unit	Maintenance	Disconnect the lift from the mains before maintenance	

Only qualified personnel are authorized to operate the lift.
The operator must ensure that the entire area around the lift is clear of people before performing ascent or descent phases.
Do not leave objects or tools scattered on the platform or beneath it .

4 INSTALLATION

4.1 GENERAL

The lift is supplied in a complete standard configuration by the Manufacturer, in various components that are presented as sub-assemblies:

- N ° 2 bearing units complete with platforms and hydraulic cylinders
- N ° 1 control unit with hydraulic unit
- N ° 1 box containing the hydraulic pipes, the connection cables, adhesives and technical documentation
- N ° 4 flaps, (2 front and 2 rear) with attached elements for connection to the platforms

Optional accessories are available on request.

	In case of doubts about the installation, operation and decommissioning of the lift, contact the manufacturer immediately.

4.2 TRANSPORT AND HANDLING

	Driver of lifting and handling means: operator qualified to use means for lifting and handling materials and machines (carefully following the manufacturer's instructions), in compliance with the laws in force in the country of the lift user.
	N.B. The Manufacturer is not liable for damage caused to people or things due to the use of lifting systems other than those described.
	Pay the utmost attention during handling operations. Loading and unloading operations must be planned and managed and a safe working system adopted.

The lift is shipped to the customer and transported by truck (or similar vehicle).
Each unit is shipped in two packages, one containing the lift and the other the control unit.
The lift is packed in a single closed package with 2 metal straps on a wooden pallet.
The weight of the lift packagingvaries from a minimum of 700 to a maximum of 850 kg (depending on the model chosen).
Dimensions are specified inPicture 10.

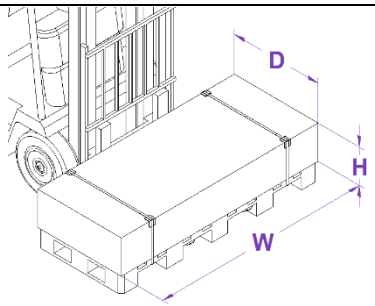

W	1740 mm
D	600 mm
H	420 mm

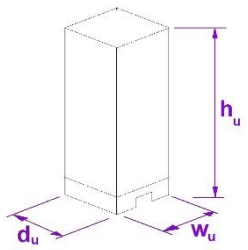

w_u	500 mm
d_u	420 mm
h_u	1200 mm

Picture 10 – Packaging and handling

For all lifting operations, place the lift and the truck on a solid, flat surface. Leave enough space around the lift to operate safely making sure there are no obstacles.
If the lift needs to be transported, use a vehicle with adequate characteristics capable of carrying out the transport and subsequent loading/unloading phases of the lift in safe conditions and in compliance with current and applicable local regulations.
During handling operations for the working phases, make sure that the ground is able to support the weight of the lift plus the weight of the handling vehicle.
When loading / unloading or transporting the equipment to the customer, it is necessary to ensure the adequacy of the loading vehicles and vehicles (eg cranes, trucks, etc.) and the lifting equipment used. It is also necessary to ensure that the components are lifted and transported without risk of falling, taking into account the dimensions, weight, center of gravity of the package and delicate parts not to be damaged.

4.3 STORAGE

In case of inactivity, the lift must be stored taking the following precautions:

- Store the lift indoors, away from direct sunlight and humidity at temperatures between -10 ° C and + 40 ° C;
- Grease the unpainted parts;
- Protect the lift from shocks and stresses;
- Prevent the lift from coming into contact with corrosive substances.

If packaged, the consistency of the packaging is such as not to allow stacking of the package, and in any case such as not to bear weight on the packaging.

4.4 OPENING THE PACKAGING

Open the package taking all precautions to avoid injury to persons and damage to the components of the lift, keeping a safe distance when opening the straps.

4.5 INSTALLATION

	**NOTICE!** The following provisions are always borne by and under the complete responsibility of the user and nothing can be attributed to the Manufacturer for damage to property, people and / or animals due to bad installation.
	**Lift off:** with mechanical and electrical power supply disconnected, sectioned or deactivated; lift in stopped condition.

NUMBER OF OPERATORS:1

4.5.1 INSTALLATION AREA

The arrangement of the maneuvering area must be carried out in such a way as to optimize the ergonomics and safety of the workplace: leave a sufficient area around it to allow easy operations of use and for maintenance and adjustment operations.

4.5.1.1 CHOICE OF THE WORK AREA

The lift is built for use in closed and sheltered areas.
Choose the work area taking into account that from the command position the operator must be able to view the lift and the surrounding area. He must prevent, in this area, the presence of unauthorized persons and objects that could cause a source of danger
The work area must not be exposed to dangerous movements due to other machines in operation.
The work area must not be near washing machines, paint benches, solvent or paint deposits; Installation in the vicinity of rooms where explosive atmospheres can be created, even temporarily, is prohibited. It is necessary to verify compliance with the provisions of the safety standards in the workplace with regard to the minimum distance from walled surfaces, work areas or safety of other machines or structures, escape routes, etc.
In the case of a low ceiling, to prevent the raised vehicle from colliding with it, it is advisable to install a photoelectric barrier on the ceiling.

4.5.1.2 ILLUMINATION OF THE WORK AREA

The lighting must be made in accordance with the legislation in force in the place of installation; an average illuminance equal to or greater than 300 lux is recommended. All areas of the lift must be illuminated uniformly and sufficiently to ensure the adjustment and maintenance operations provided for in the manual, avoiding shadow areas, reflections and glare.

4.5.1.3 GROUND FIXING

The lift must be installed on a horizontal surface of adequate strength (ref. Picture11).
The surface and foundations must be suitable to withstand the maximum stress values and under the most unfavorable operating conditions. In case of installation in the hole it is necessary to check the correct dimensioning of the same.
For installation on raised floors, it is recommended that the maximum load capacity of the floor be respected.
The supporting surface must be flat and level (+/- 5 mm).

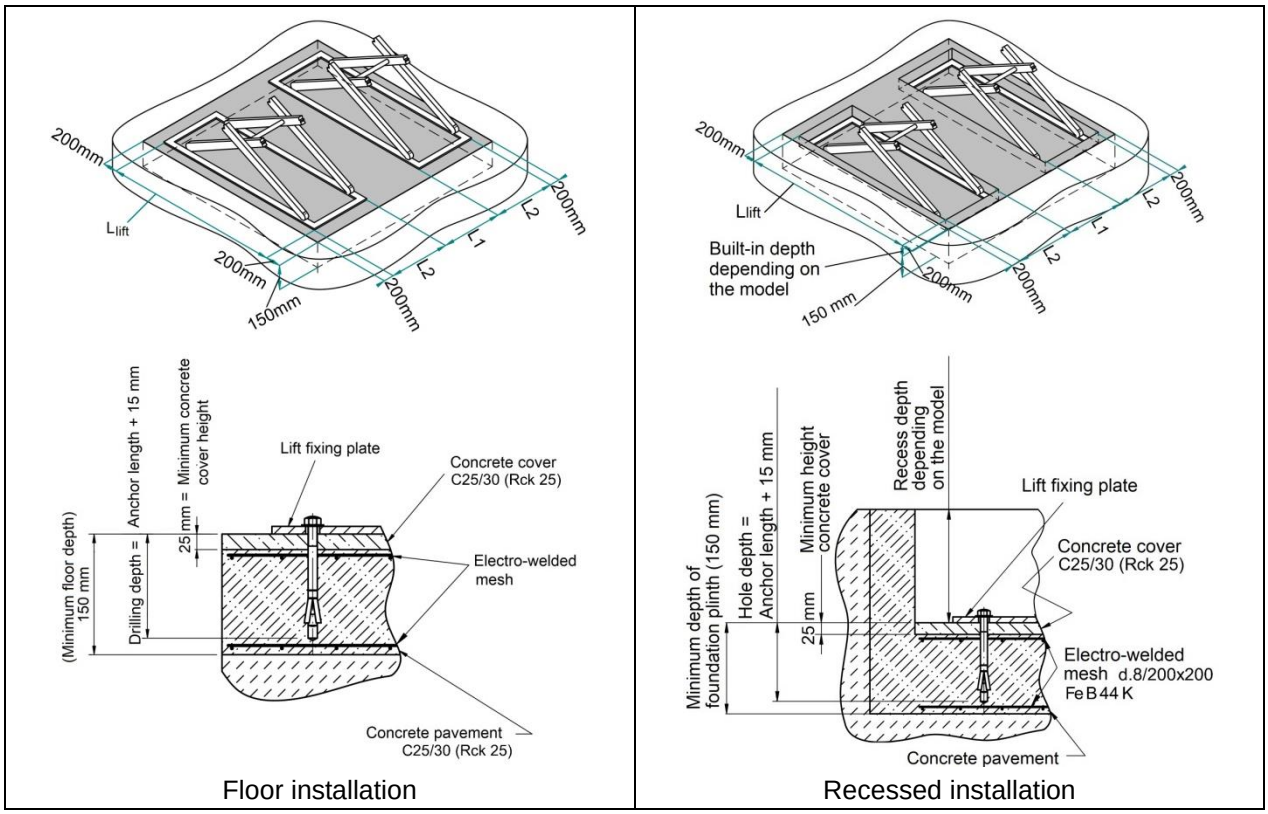

Picture11 – Ground fixing

4.6 CONNECTIONS

4.6.1 CONNECTION TO THE HYDRAULIC SYSTEM

	Mechanical maintenance technician: qualified technician, able to operate the lift under normal conditions, to intervene on the systems to carry out the necessary adjustments, maintenance and repairs. **Typically he is not authorized to work on electrical systems in the presence of voltage.**

NUMBER OF OPERATORS: 1

The lift is supplied with unconnected hydraulic hoses.

After defining the installation side of the control unit with respect to the lift (ref. Picture 12orPicture 13),it will be the responsibility of the qualified technician:

- Connect the hydraulic hoses to the fittings on the fixed platforms using the letters affixed to them.
- Tighten securely.
- Connect the hydraulic pipes to the fittings on the hydraulic unit using the letters placed on it.
- Tighten securely.

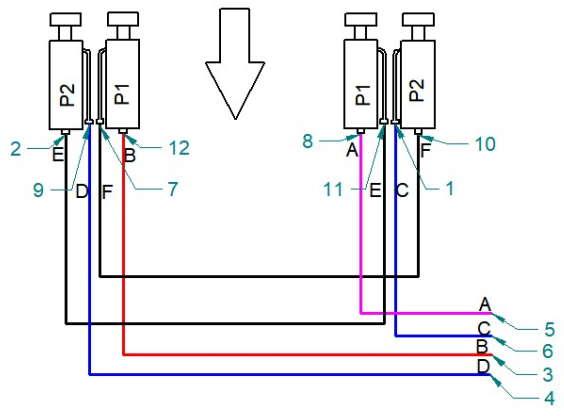

HOSE CODE	HOSE LENGHT mm	TYPE OF HOSE CONNECTION	HYDRAULIC HOSE	TYPE OF HOSE CONNECTION
A	5300	FG 1/4"	1/4" 2SN SAE 100 R25	Eye Bolt 1/4"
B	6800	FG 1/4"	1/4" 2SN SAE 100 R25	Eye Bolt 1/4"
E	1980	FG 1/4"	1/4" 2SN SAE 100 R25	Eye Bolt 1/4"
F	1980	FG 1/4"	1/4" 2SN SAE 100 R25	Eye Bolt 1/4"
C	5370	FG 1/4"	1/4" 2SN SAE 100 R25	FG 1/4"
D	6840	FG 1/4"	1/4" 2SN SAE 100 R25	FG 1/4"

FG = swivel female fitting
M = male fitting

* Hoses Lenght may vary due to project updates

Picture 12 – Control unit installation on the right

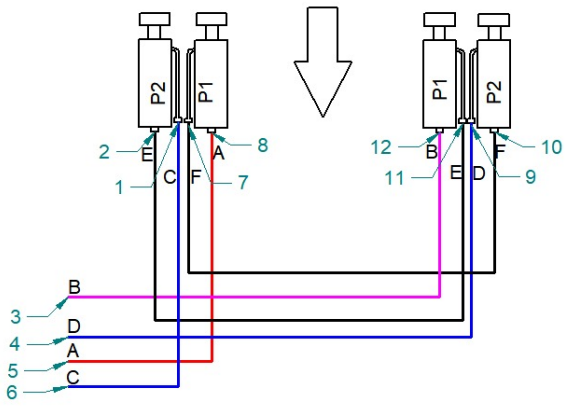

HOSE CODE	HOSE LENGHT mm	TYPE OF HOSE CONNECTION	HYDRAULIC HOSE	TYPE OF HOSE CONNECTION
A	5300	FG 1/4"	1/4" 25N SAE 100 R25	Eye Bolt 1/4"
B	6800	FG 1/4"	1/4" 25N SAE 100 R25	Eye Bolt 1/4"
E	1980	FG 1/4"	1/4" 25N SAE 100 R25	Eye Bolt 1/4"
F	1980	FG 1/4"	1/4" 25N SAE 100 R25	Eye Bolt 1/4"
C	5370	FG 1/4"	1/4" 25N SAE 100 R25	FG 1/4"
D	6840	FG 1/4"	1/4" 25N SAE 100 R25	FG 1/4"

FG = swivel female fitting
M = male fitting

* Hoses Lenght may vary due to project updates

Picture 13 – Control unit installation on the left

4.6.2 CONNECTION TO THE ELECTRICAL SYSTEM

	**Electrical maintenance technician:** qualified technician, performs electrical maintenance interventions, preventive or on call for failure, and carries out assistance activities, in order to ensure the correct functioning of the machinery / systems.
	**Lift off:** with mechanical and electrical power supply disconnected, sectioned or deactivated; lift in stopped condition.

NUMBER OF OPERATORS: 1

The lift is not supplied with a power socket; it will be the responsibility of the qualified technician:

- Check the electrical characteristics on the data plate of the lift.
- Connect voltage to the power cable located inside the control unit.
- Ground the lift.

4.6.3 FLAP ASSEMBLY

	**Mechanical maintenance technician:** qualified technician, able to operate the lift under normal conditions, to intervene on the systems to carry out the necessary adjustments, maintenance and repairs. **Typically, he is not authorized to work on electrical systems in the presence of voltage.**

NUMBER OF OPERATORS: 1

The lift comes with unconnected flaps. it will be the responsibility of the qualified technician:
Proceed with the assembly of the flaps according to the attached diagram (ref. §10.4).

4.7 PRELIMINARY CHECKS

	**Operator (or user):** operator without specific skills, assigned to the operation of the lift, able to perform simple operations
	**Connected lift:** with electrical and pneumatic power supply connected; lift in stopped condition.

NUMBER OF OPERATORS: 1

Before the first start-up of the lift, it is necessary to carry out a series of checks and controls in order to prevent errors or accidents during the start-up phase:

- Check that the lift has not been damaged during the transport phase.
- Verify, with particular care, the integrity of electrical cables and pipes.
- Check the exact connection of all external energy sources.
- Check the free movement and possible free rotation of all moving parts.
- Check that the hydraulic connections are well tightened so as not to cause dangerous leaks.

Before **each** start-up of the lift, it is necessary to carry out the following operations:

- Control of all security systems.
- Control of protections.
- Control of signage.

4.8 TESTS WITHOUT LOAD

	**Operator (or user):** operator without specific skills, assigned to the operation of the lift, able to perform simple operations
	**Lift in motion:** with connected mechanical and electrical energy supply, active safety elements; lift in working condition.

NUMBER OF OPERATORS: 1

Before starting to use the lift at the first use or after a long period of standstill, carry out at least 3 empty cycles, complete with ascent and descent to check for any anomalies in particular about the movement of the cylinder, moving elements, etc. Then proceed with the tests with load.
In particular, it is necessary to verify that:

- that the lift reaches the maximum height;
- that the final descent sensor intervenes;
- that the buzzer intervenes in the final descent phase.

4.9 TESTS WITH LOAD

	**Operator (or user):** operator without specific skills, assigned to the operation of the lift, able to perform simple operations
	**Lift in motion:** with connected mechanical and electrical energy supply, active safety elements; lift in working condition.

NUMBER OF OPERATORS: 1

Before starting to use the lift at the first use or after a long period of standstill, carry out at least 3 cycles with complete ascent and descent load in order to check for any anomalies in particular in the movement of the cylinder, moving elements, etc.
Carry out the cycles with a vehicle weighing less than 70% of the lift capacity.
During the function test, observe all operating components and verify proper installation and operation. Do not lift additional vehicles until a full operational check has been performed with a typical vehicle.
In the event of irregularities, restore the lift, resolve the causes that led to the irregularities and then repeat the tests without loadand then the tests with load.

5 LIFT DESCRIPTION

	**Operator (or user):** operator without specific skills, assigned to the operation of the lift, able to perform simple operations

NUMBER OF OPERATORS: 1
The lift has been designed for lifting vehicles at height and parking at a height between the minimum height and the maximum height allowed.
The maximum weight that can be lifted is specified on the lift data plate.
The lift is suitable for reversible loading.
All mechanical structures, such as platforms, ramps, bases and arms are built in steel in order to provide considerable rigidity and resistance to the structure.
In this chapter we report a description of the lift, identifying the parts that compose it, thus allowing the user to get to know it easier.

5.1 PRINCIPLE OF OPERATION

The hydraulic unit, acting on the cylinders, allows the lifting of the platforms.
The series and crossed connection of the hydraulic cylinders ensures that the lifting of the platforms takes place in absolute synchrony.
The descent takes place due to the weight of both the platforms and the lifted load.
A maximum pressure valve protects the hydraulic system by preventing the pressure from exceeding the maximum safety level established.
The lifting or lowering movement of the lift is controlled by the appropriate buttons located on the control panel of the control unit (ref. Picture4).
Whenever you want to bring the lift back to the ground, by pressing the lowering button, the lift will stop at a safety height from the ground .
This allows the operator to verify that the safety area is free from objects and people.
After this maneuver, you can continue downhill by pressing the final stroke button.
This last phase is accompanied by a specific acoustic signal.

5.2 IDENTIFICATION OF MAIN COMPONENTS

With reference to Picture3, the lift is made up of two units; each unit is composed of a platform (Picture3 - pos. 2) connected to a base (Picture3 - pos. 8) through a scissor lifting system made with a double external scissor(Picture3 - pos. 4and5) and a double internal scissor (Picture3 - pos. 3and7).
The platforms, having a length of 1585 mm, can reach a length of about 2173 mm (F) thanks to the ramps at the ends (Picture3 - pos. 1) to allow the lifting of vehicles with a longer wheelbase. When the lift is on the ground, the ramps allow the vehicle to go up and / or down.
The lifting system consists of two arms, one internal (Picture3 - pos. 3 e 7) and one external (Picture3 - pos. 4 e 5), and two cylinders (Picture3 - pos. 10).
The motion is transmitted from the hydraulic cylinders to the scissors.
The lifting and lowering operations of the platforms are made possible by a control unit (Picture3 - pos. 6) placed next to the lift.

5.3 COMMAND IDENTIFICATION

With reference to Picture4, the controls for the operation of the lift are:

- Main switch (pos. 12). The main switch has two operating positions:
  - *Position 0:* the lift's electrical circuit is not powered; it is possible to ensure the locking of the switch with a padlock to prevent unauthorized use of the lift.
  - *Position 1:* the lift's electrical circuit is powered.

  The main switch also has the function of an emergency switch.
- Up button (pos. 11): if pressed, activates the motor and the lift goes up.
- Down button (pos. 13): if pressed, activates the down solenoid valve and the lift goes down.
- Final descent button (pos. 15): if the button is pressed after the lift has reached the safety height, the acoustic warning signal is activated and, after a few seconds, the solenoid valve is activated. descent and the lift performs the final descent; to lower the lift completely, keep the button pressed.
  If the button is pressed before the lift has reached the safety height, only the warning beep sounds.

5.4 ENVIRONMENTAL CONDITIONS

The lift does not require particular environmental conditions; it must be used indoors, on horizontal, level, compact terrain and in any case able to guarantee the stability of the lift in all its conditions of use.
It is forbidden to use the lift in environments that are:

- at risk of fire;
- in an explosive atmosphere;
- very humid (UR>60%).

5.5 LIGHTING

The lighting during use must ensure good visibility in every point of the work area.

5.6 SOUND EMISSIONS

The weighted emission sound pressure level A LpA in the work place (s) for a complete working cycle of the lift is less than 70 db (A) considered at a safe distance.
The A-weighted sound power level is less than 80 db (A).
The instantaneous C-weighted sound pressure in the workplace is not such as to generate danger for the operators.

5.7 STANDARD SUPPLY

The lift is supplied complete for commissioning.
It is supplied with:

- Instruction Manual for Use and Maintenance of the lift.
- Data plate with CE marking of the lift.
- CE declaration of conformity of the lift.

6 USE OF THE LIFT

	**Operator (or user):** operator without specific skills, assigned to the operation of the lift, able to perform simple operations
	**Lift in motion:** with connected mechanical and electrical energy supply, active safety elements; lift in working condition.

NUMBER OF OPERATORS:1

- The use of the lift is allowed only and exclusively to authorized personnel.
- Before putting the lift into operation, it is mandatory to read this entire Instruction Manual.
- Before putting the lift into operation, familiarize yourself with the controls and its working capabilities.
- Before starting the lift, the operator must make sure that no one is near the lift.
- Before putting the lift into operation, check that all the conditions for safe operation are met for the lift.

The safety of the operator and of the people in the vicinity depends on the judgment and prudence of the operator in using the lift. It is therefore necessary to know the position and function of all the controls well and to constantly monitor the operation of the lift and the surrounding environment.

6.1 USE

There are normally four phases in the use of the lift:

1. Preparation of the vehicle
2. Lift
3. Parking
4. Descent

6.1.1 VEHICLE PREPARATION

Place the vehicle in the center of the platforms and adjust the flaps.
Place the rubber pads below the positions indicated by the vehicle manufacturer for lifting.
It is forbidden to overlap the rubber pads.
The load distributions on the front and rear load bearing points must be (in both directions) 2: 3 and 3: 2

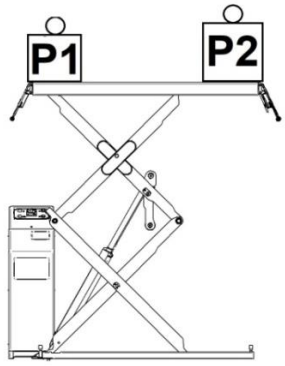

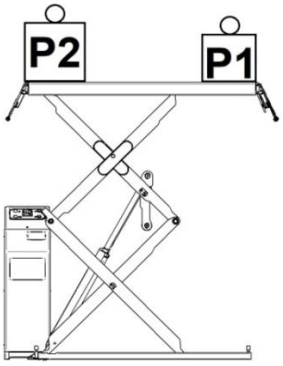

Lifting capacity 3000 kg
max P1 = 1200 kg
max P2 = 1800 kg

Lifting capacity3500 kg
max P1 = 1400 kg
max P2 = 2100 kg

Picture14- Distribution of the maximum loads on the support points

6.1.2 LIFT

	**The lift cannot take the load from the ground!**

Turn the main switch to position 1 (ref. Picture4 – pos. 12) and press the up button (ref. Picture4 – pos. 11) until the desired height is reached.

6.1.3 PARKING

Once the desired position has been reached, to park, release the up button.
The movement stops automatically.

6.1.4 DESCENT

To descend, keep the descent button pressed (ref. Picture4 – pos. 13).
The lift will descend, under its own weight and the weight of the vehicle, up to a safety height.
Make sure that the safety zone is clear and at this point press the final stroke button (ref. Picture4 – pos. 15).

6.2 LEVEL OF PLATFORMS

During operation of the lift may occur of the conditions that lead to a loss of the leveling of platforms.
In order to restore the leveling of the platforms it is necessary to proceed as indicated below:

- Raise until reaching the mechanical end of the cylinders.
- Press and hold the rise control for about 15-20 seconds.
- Leave everything stationary on oil at the level of the mechanical limit switch
- Wait about 5 minutes
- Press and hold the rise control for another 15-20 seconds
- Bring the lift to the ground.

6.3 MANUAL AND EMERGENCY DESCENT

In case of failure of the control unit, the lift can be brought back to the initial position by intervening, with the manual descent, as follows:

- On the hydraulic unit (ref. Figure 4 - pos. 17), inside the control unit, unscrew the knurled screws (ref. Figure 15 - pos. A and B)
- Unscrew the brass knob anticlockwise for the manual opening of the solenoid valve
- After the manual lowering, restore the initial conditions to allow the lift to operate smoothly.
- In the event of a power failure, wait until it is restored.

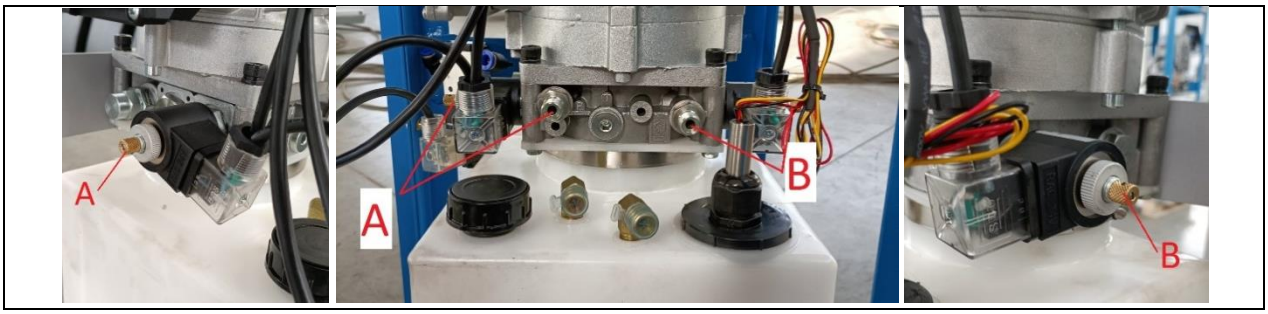

Picture15–Manual descent

7 MAINTENANCE

	**Operator (or user):** operator without specific skills, assigned to the operation of the lift, able to perform simple operations.
	**Electrical maintenance technician:** qualified technician, performs electrical maintenance interventions, preventive or on call for failure, and carries out assistance activities, in order to ensure the correct functioning of the machinery / systems.
	**Lift off:** with mechanical and electrical power supply disconnected, sectioned or deactivated; lift in stopped condition.

NUMBER OF OPERATORS: 1

Before any maintenance, adjustment or repair operation, isolate the lift.
The safety of the operator and of the people in the vicinity depends on his ability to judge and be prudent in using the lift.

7.1 LIFT ISOLATION

Before carrying out any type of maintenance, it is necessary to comply with the following requirements:

- Do not carry out maintenance operations under the lift
- Disconnect the power supply by acting on the main switch (ref. Picture4 – pos. 12).
- Secure the main switch with a padlock and keep the key in a safe place, in order to prevent the lift from being turned on by unauthorized persons.
- Disconnect the lift from the mains.

	**Before carrying out repairs or maintenance, disconnect the main power supply, secure the main switch with a padlock and keep the key in a safe place, in order to prevent the lift from being turned on by unauthorized persons.**

7.2 SAFETY MEASURES

When carrying out maintenance or repair work, it is advisable to apply what is recommended below:

- Prepare all forms of accident prevention provided for the type of operation in progress;
- Always use suitable personal protective equipment (safety shoes, overalls and work gloves);
- Do not perform repairs you are not familiar with. Always follow the instructions and in the absence of these contact the supplier or expert personnel;
- Pay attention not to release hydraulic oil into the environment;
- Do not carry out maintenance operations under the lift;
- To access the highest parts of the lift, use suitable means for the operations to be performed, for example a suitable ladder for accessing the high parts;
- At the end of the work, restore and correctly fix all the protections and guards removed.

	The Manufacturer will not be held responsible for non-compliance with the listed recommendations and for any other use that is different or not mentioned in these instructions.

7.3 ORDINARY MAINTENANCE

Maintenance operations must be carried out under the conditions described in Table7.1.

The lift has been designed to minimize routine maintenance, it is up to the operator to judge the state and its suitability for use.
The intervention times indicated in this manual are for information only and relate to conditions of normal use, therefore they may undergo variations in relation to the type of service, more or less dusty environment, seasonal factors, etc.
It is recommended to stop and intervene with maintenance whenever you feel a suboptimal operation, this will always allow you to have maximum efficiency.
Visually check the state of the individual parts that make up the machine, verifying that there are no alterations due to sagging or deformation.

	**NOTICE !** Before any maintenance operation, the maintenance technician must isolate the lift from energy sources

Always use the appropriate PPE Personal protective equipment:

- Gloves;
- Safety shoes;
- Goggles;
- Suitable clothing.

	**PLEASE NOTE** Failure to comply with the requirements exempts the Manufacturer from any liability for the purposes of the Warranty.

These operations, albeit simple, must be performed by Qualified Personnel.
Scheduled ordinary maintenance includes inspections, checks and interventions which, to prevent stops and breakdowns, they keep under systematic control:

- The state of lubrication of the lift;
- The state of the parts subject to wear.

7.3.1 CLEANING

Periodically clean the lift and the lift area at least once a month and whenever needed: use self-cleaning cloths.
When using compressed air wear protective goggles.
It is very important to make sure that the chromed rod of the hydraulic cylinders is always clean and intact. Otherwise, gaskets may leak with consequent malfunctions.
At the end of cleaning, we recommend that you always oil and grease the moving parts.

	The use of water or flammable liquids is prohibited

7.3.2 LUBRICATION

Periodically lubricate/grease the mechanical parts that contribute to the movement of the mobile parts of the lift.
Grease the sliding surfaces of the pads.
The Scheduled Maintenance Plan described below must in any case be implemented to keep the lift's functionality efficient.

7.3.3 CHECK THE LEVEL AND REPLACE THE HYDRAULIC OIL

Any top-ups must be carried out with the same type of oil used in the system filling phase.
The oil used and recommended for use is

Fina HYDRAN TS 32(or equivalent)

The main characteristics of this paraffin-based mineral oil are as follows:

Viscosity at 40° 32cSt

If topping up is too frequent, check that there are no leaks in the system.
Every 1000 hours of operation it is recommended to replace all the hydraulic oil in the hydraulic system of the lift: contact the Customer Service Department.

Table7.1 - Scheduled maintenance

MAINTENANCE	FREQUENCY
Check:Anomalies or damage	Every 10 working hours or every day
Cleaning:General cleaning of the lift	Every 50 working hours or every 1 week
Check:Check for oil leaks and tank oil level check	
Check:Check bolted connections	Every 1 month of work

MAINTENANCE	FREQUENCY
Replacement: Internal hydraulic oil filter	Every 1000 working hours or 1 year.
Check: Check the state of contamination or aging of the oil. Contaminated oil is the main cause of incorrect valve operation and a short life of gear pumps	Every 6 months
Replacement: Hydraulic oil	Every 1000 working hours or every 12 months

7.4 EXTRAORDINARY INTERVENTIONS AND MAINTENANCE



Mechanical maintenance technician: qualified technician, able to operate the lift under normal conditions, to intervene on the systems to carry out the necessary adjustments, maintenance and repairs. **Typically he is not authorized to work on electrical systems in the presence of voltage.**

The recording of extraordinary interventions certifies the activity carried out by the maintenance technician on the Equipment in the treatment of unscheduled maintenance events (for example following breakage or defects in a component).
It will be necessary to record the anomaly found and the measure taken in Table7.2.

Table7.2 - Repairs registration card for extraordinary maintenance

N	Fault	Possible cause and description of the intervention	Date	Maintenance Signature
1				
2				
3				
4				
5				

8 TROUBLESHOOTING

	**Operator (or user):** operator without specific skills, assigned to the operation of the lift, able to perform simple operations.

	**Connected lift:** with electrical and pneumatic power supply connected; lift in stopped condition.

NUMBER OF OPERATORS: 1

This chapter lists the most frequent causes of blocking or malfunctioning of the lift. In correspondence of easily identifiable symptoms, possible remedies are reported.
Attention! In case of intervention on the lift, extreme attention is recommended: excessive safety can cause even serious accidents to inexperienced people.
The interventions marked with the letter "U" can be carried out by the user, following the instructions given in this manual.
The interventions marked with the letter "S" are the responsibility of specialized personnel; therefore it is advisable, once the cause has been identified, to request the intervention of that of qualified technicians.

N	Main symptom	Secondary symptom	Likely cause	How to check	Possible remedy
A 1	The lift does not work	The indicator light is off	Incorrect connection of the power plug	Check the power plug if it is fully inserted	Connect the power plug again and turn on again
A 2			No power source provided	Measure the voltage at the power outlet. If the tester reads 0 V, the power source is disconnected	Check or connect the power source
A 3			The electrical wires are interrupted		Replace the power cord
A 4			The fuses are blown	Remove the fuses from the fuse holder, and check them with a tester. If the tester shows ∞Ω,the fuse is blown	Find the cause of the blown fuse and replace it with a new one
B 1	The lift does not go up		The motor does not turn in the correct direction	Listen if the engine is running	Exchange two phases
B 2		Noisy control unit	The oil in the tank is insufficient	Check the oil level in the tank. The oil level is under the suction pipe.	Add hydraulic oil to the tank.
B 3			The up button is faulty	Verify that the descent works	Check the up button and the connection. Replace if necessary
B 4			The lowering valve does not close		Check and clean if dirty, or replace if faulty.
B 5			Gear pump is faulty		Replace the pump
B 6			The engine is faulty		Replace the engine
C 1	The lifting capacity is insufficient		The pump is faulty		Check the pump and replace it if necessary.
C 2			Oil leaks from the hydraulic unit		Check the maximum pressure valve and the drain solenoid valve

9 ADDITIONAL INSTRUCTIONS

9.1 STORAGE



ATTENTION!
All operations carried out on the lift must be carried out with the lift disconnected from electricity and with the hydraulic system not under pressure.

If you intend not to use the lift for a long period, it is necessary to disconnect it from the electric and pneumatic mains, and to oil and protect the cylinder rods and all the lift guides.
It is recommended that the lift be rendered inoperative by removing the oil contained in the cylinders, in the pipes, in the body of the hydraulic motors and in all the components of the hydraulic circuit.
Emptying the hydraulic system must be done in full compliance with local environmental regulations.
When starting up after a period of storage, strictly follow all the instructions in the Chapter 4.

9.2 SCRAPPING

When the lift is demolished, it must be treated as special waste and must therefore be broken down into its homogeneous parts; subsequently these parts must be disposed of separately according to the laws in force.
At first it will be necessary to remove all the oil in the hydraulic circuit having been careful to take all precautions to avoid spills.
Upon dismantling, it is necessary to separate the plastic parts and electrical components that must be sent to separate collections in compliance with current legislation.
As far as the metal mass of the lift is concerned, the subdivision between the steel parts and those in other metals or alloys is sufficient for a correct sending to the casting recycling.

9.2.1.1 SAFETY INSTRUCTIONS - HANDLING

Pay attention, since these are components of even heavy weight, to handling them in order to avoid that, falling, they can cause damage to people or things.

9.2.1.2 SAFETY INSTRUCTIONS - TRANSPORT

Transport the equipment in a stable position, with the hydraulic system emptied of the hydraulic fluid.

9.2.1.3 SAFETY INSTRUCTIONS –STORAGE

Store in covered and dry places to avoid the formation of rust on the metal parts and consequent washing away from the ground.

10 ATTACHMENTS

10.1 FUNCTIONAL DIAGRAMS

10.1.1 WIRING DIAGRAM 400V/230V
3PH WS Version

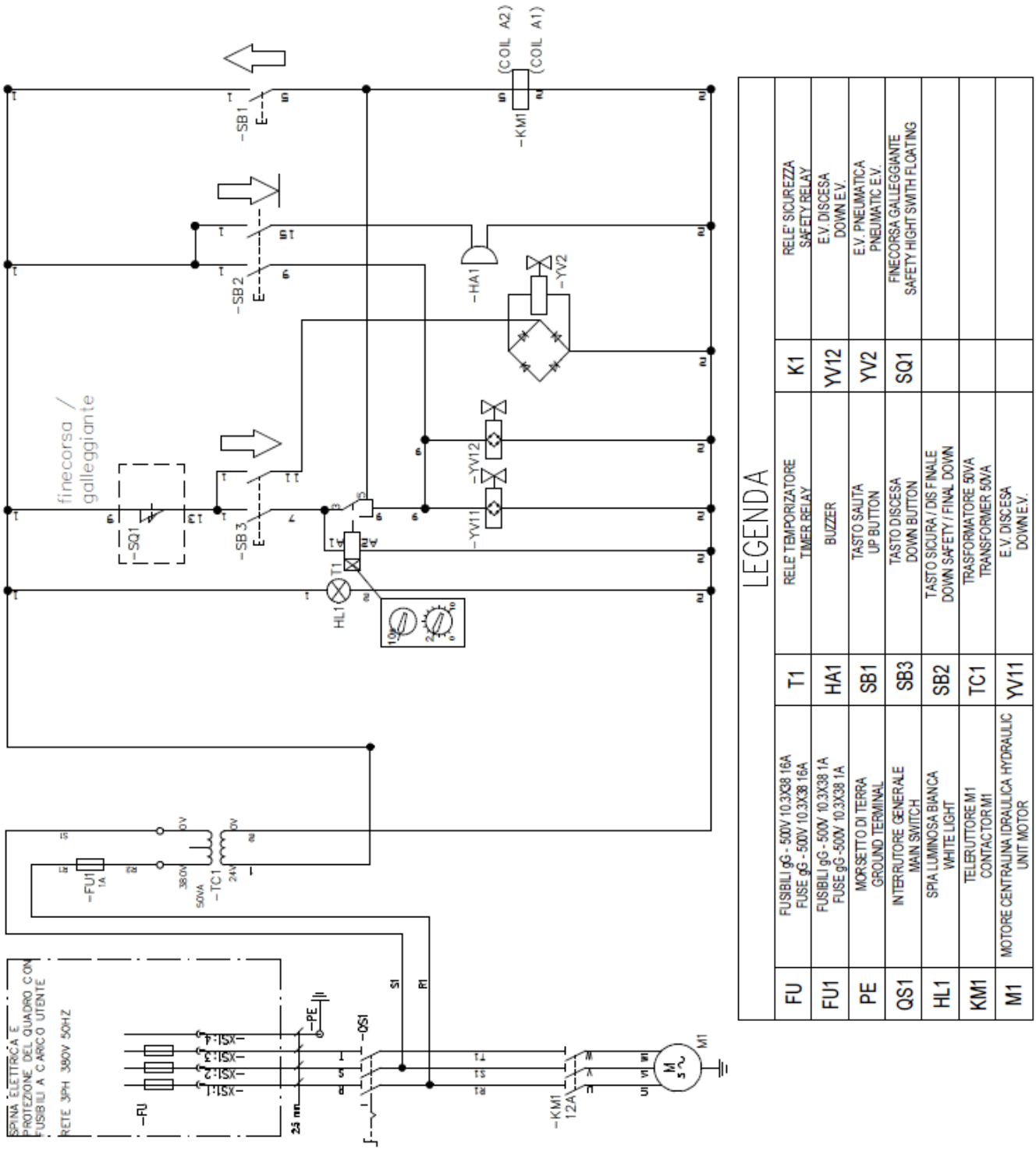

10.1 FUNCTIONAL DIAGRAMS

10.1.1 WIRING DIAGRAM 400V/230V 3PH
NS Version

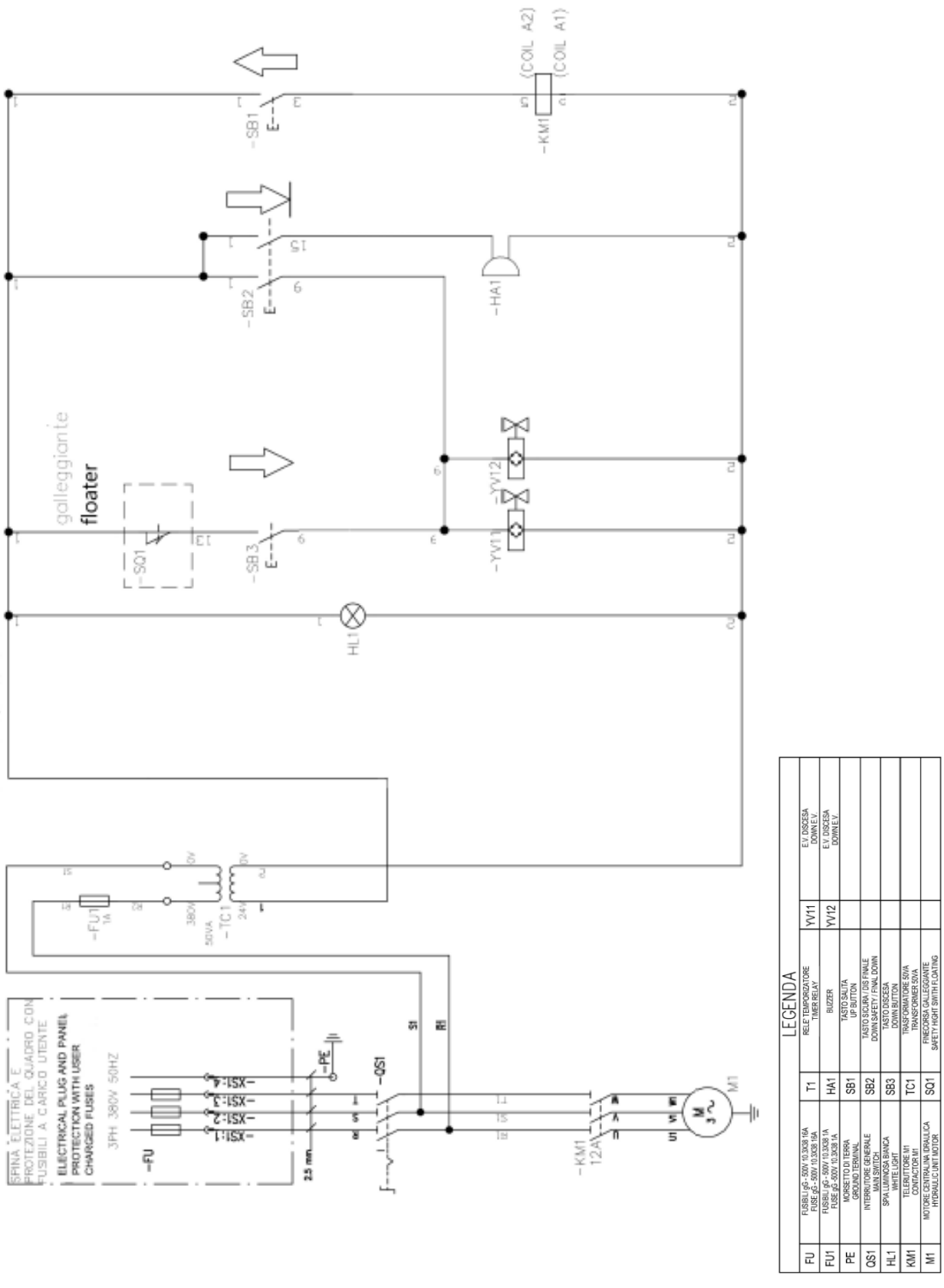

10.1.2 HYDRAULIC DIAGRAM

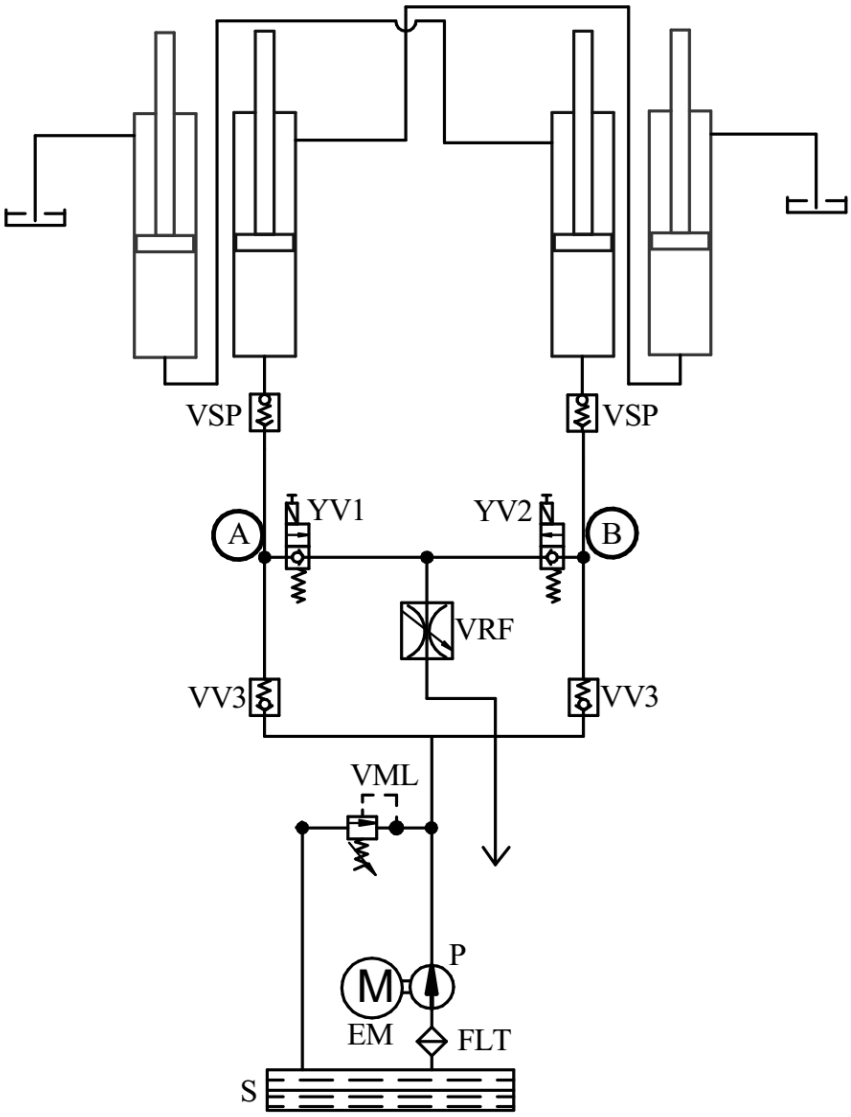

EM	MOTOR
P	PUMP
FLT	FILTER
VML	RELIEF VALVE
VV3	NON-RETURN VALVE
VRF	FLOW REGULATION VALVE
VSP	PARACHUTE VALVE
YV1	SLAM-SHUT VALVE 1
YV2	SLAM-SHUT VALVE 2

10.2 PNEUMATIC DIAGRAM

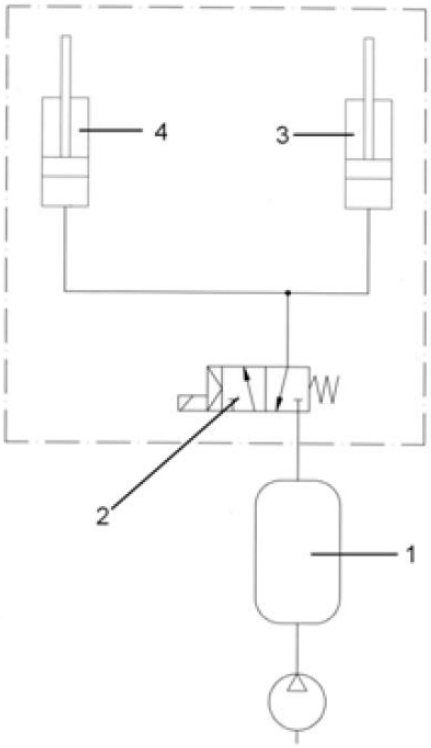

1 Tank.
2 Electric valve.
3 Pneumatic cylinder P1.
4 Pneumatic cylinder P2.

10.3 EXPLODED VIEW OF THE LIFT

Documentation provided at the request of the Customer.

10.4 FLAP ASSEMBLY

Each platform of the lift is equipped with 1 flap in the right configuration and 1 flap in the left configuration. The flap configuration is determined by the type of support (seePicture17).

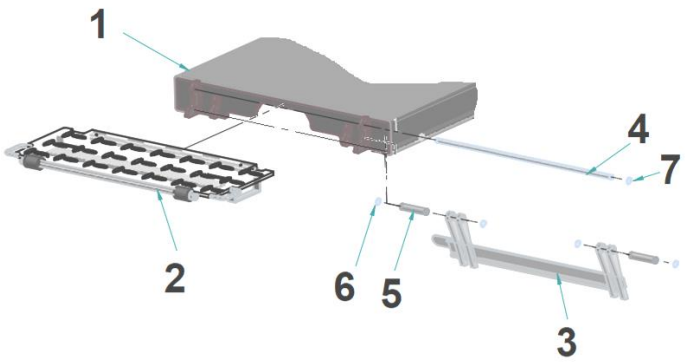

1	Footboard
2	Assembled flap
3	Flap support (see Picture 17)
4	Flap pin
5	Support pin
6	Seeger ring d15
7	Seeger ring d12

Picture16– Assembling the flap

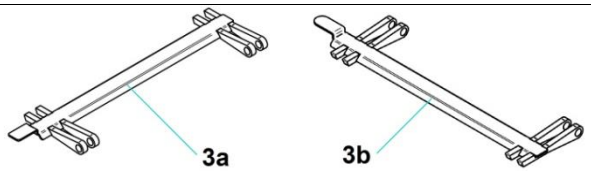

3a	Left flap support
3b	Right flap support

Picture17- Identification of the direction of the flap

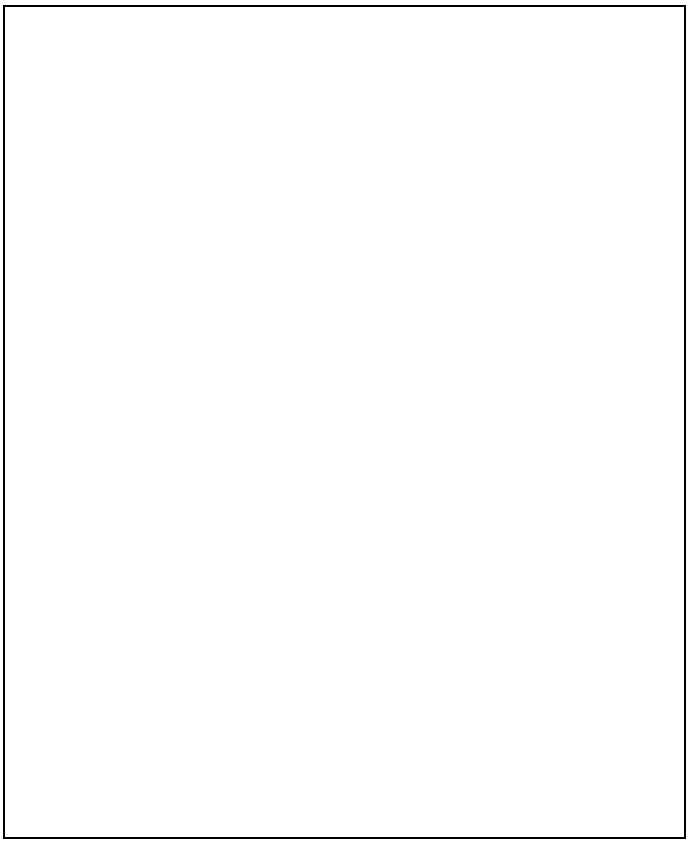

Even partial reproduction of this manual is strictly prohibited