NEWJIELI

Focused on providing high-quality measurement tools and instruments

Measuring tool series

- HIGH QUALITY
- COMPETITIVE PRICE
- ONE-STOP SERVICE
- OEM&ODM PROVIDED

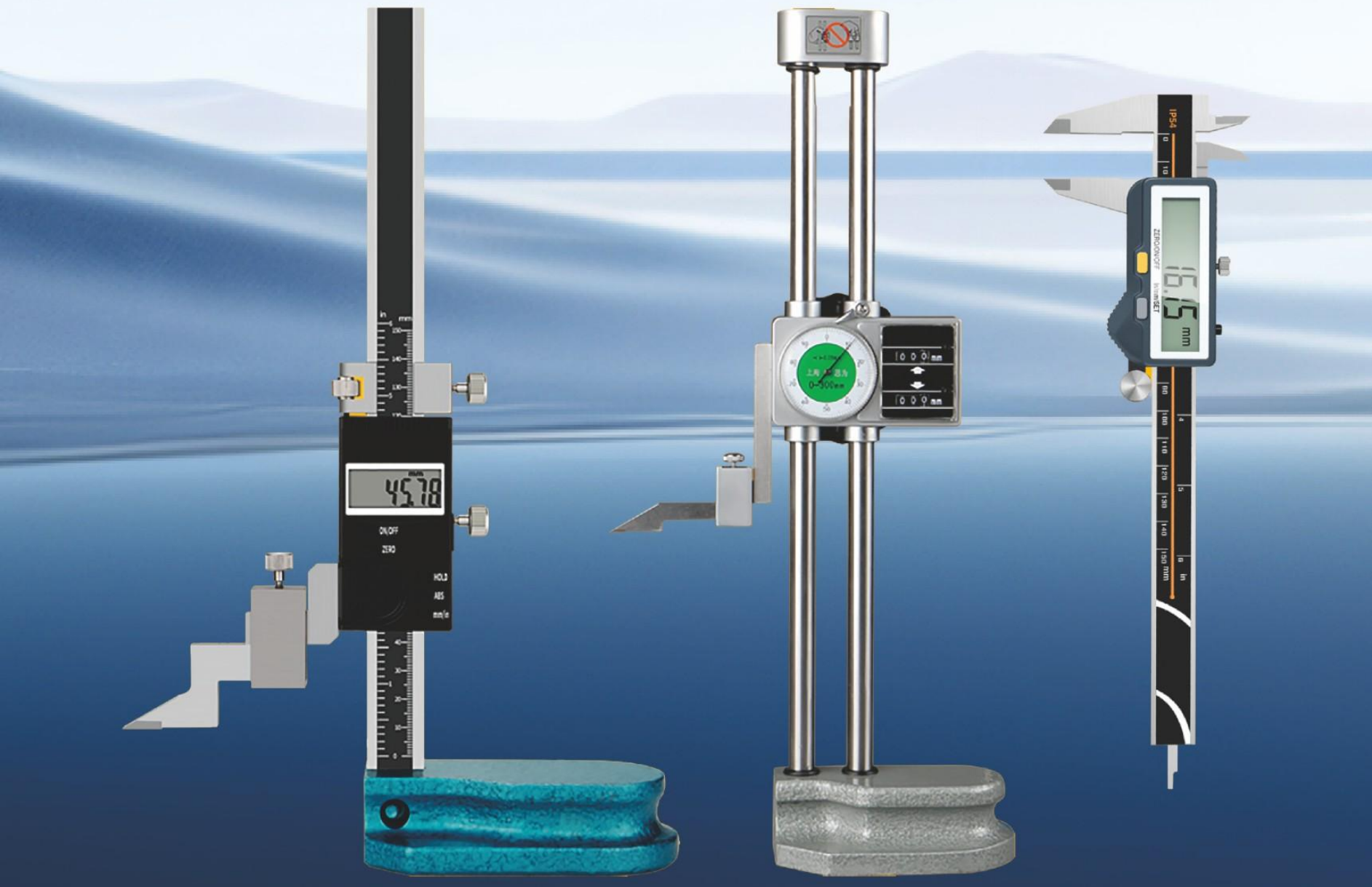

Features

- 360° Full Measurement Capability
- Auto-Rotating LCD Display: When the inclinometer is inverted, the angle reading on the screen automatically flips for easy viewing.
- Precision Stainless Steel Measurement Structure
- Easily Recalibrated: No special tools or equipment required.
- Multi-Purpose Measuring Tool: Combines a protractor, inclinometer, and spirit level in one device.



Product Specification

Range	4 × 90° (0~360°)
Temperature	+5 ℃~+40℃
Display Resolution	0.1°
Accuracy	0° and 90° ≤ 0.1° others ≤ 0.2°
Battery	2 AA Batteries



DIGITAL LEVEL

Features

- 360° Full Measurement Capability
- Auto-Rotating LCD Display: When the inclinometer is inverted, the angle reading on the screen automatically flips for easy viewing.
- Precision Mechanical Stainless Steel Measurement Structure
- Easily Recalibrated: No special tools or equipment required.
- Multi-Purpose Measuring Tool: Combines a protractor, inclinometer, and spirit level in one device.



Product Specification

Range	4 × 90° (0~360°)
Temperature	+5 ℃~+40℃
Display Resolution	0.1°
Accuracy	0° and 90° ≤ 0.1° others ≤ 0.2°
Battery	2 AA Batteries

NEWJIELI

INTELLIGENT GONIOMETER

Features

- Dual Laser Line Projection
- Auto-Flipping Readout: Adapts to meet various needs and makes data viewing convenient.
- Dual Ultra-Wide Color Screens: High-definition display for effortless reading.
- Durable Aluminum Alloy Shell: Integrated design, shockproof, and dustproof.
- Magnetic Measurement Surface: Can attach to the measured workpiece for easy measurement.
- Absolute Zero Measurement: Based on a horizontal reference.





Product Specification

Range	4 × 90°
Temperature	0–40℃ (Not exceeding 80% Humidity)
Display Resolution	0.1°
Accuracy	± 5 mm at a 2-meter distance
Battery	3.7V lithium battery

DIGITAL LEVEL

Features

- LED Display
- Aluminum Alloy Material; Spirit Level
- Relative Angle Measurement Function
- Slope and Angle Function Conversion
- Optional Special Angle Alarm and Laser Function
- Magnetic Base



Product Specification

Model	Dimension	Range	Division	Accuracy
NSY-225	0-225	4x90°	0.05°	0.2°
NSY-400	0-400	4x90°	0.05°	0.2°
NSY-600	0-600	4x90°	0.05°	0.2°
NSY-1000	0-1000	4x90°	0.05°	0.2°

NEWJIELI

DIGITAL PROTRACTOR

Features

- Display Resolution: 0.05° /3'
- Working Humidity: ≤85% RH
- Accuracy: ±0.2°
- Operating Current: < 8mA
- Measurement Range: 0–360°
- Power Supply: 3V CR2032 Lithium Battery
- Operating Temperature: +5℃ to +45℃



Product Specification

Model	Dimension	Range	Division	Accuracy
NJC–200	0–200mm	0–360°	0.05°	±0.2°
NJC–300	0–300mm	0–360°	0.05°	±0.2°
NJC–500	0–500mm	0–360°	0.05°	±0.2°

DIGITAL DISPLAY ROLLER SCALE

Features

- Measurement Range: 0 - 199.999 meters with millimeter–level accuracy
- Clear Large Screen: Digital display with backlight
- Continuous Operation: Works up to 6 hours; auto shut–off after 3 minutes of inactivity
- Reference Point Switching: Allows flexible measurement
- Data Storage: Stores up to 10 sets of data in a loop



Product Specification

Range	0–199.999meter
Temperature	–10℃ to 50℃
Unit	MM/CM/M/IN/FT
Endurance Capability	Continuous operation for six hours
Battery	260mAh Lithium Polymer Battery

NEWJIELI

DIGITAL MICROMETER

Features

- Grade A electrostatic protection.
- Features: switch; imperial/metric conversion; zero setting at any position.
- Resolution: 0.001mm / 0.00005".
- 3V lithium battery (CR2032), power consumption < 15 μ A.
- Fast response speed, no overspeed errors.
- Automatic power-off.
- No power-up freeze failures.
- Hard alloy measuring probe.



Product Specification

Model	Dimension	Division	Accuracy
NSQC-25	0-25mm	0.001mm	± 0.03mm
NSQC-50	25-50mm	0.001mm	± 0.03mm
NSQC-75	50-75mm	0.001mm	± 0.03mm
NSQC-100	75-100mm	0.001mm	± 0.04mm

ENGRAVED SCALE MICROMETER

Features

- It has both LCD display and Vernier scale markings.
- Hard alloy measuring probe, durable and long-lasting.
- It can perform both direct measurement and comparative measurement.
- Data hold function
- Automatic power-off after 5 minutes of inactivity.
- Operating temperature: 0-40° C, operating humidity: ≤80%.
- Power source: CR2032.
- Features: switch; imperial/metric conversion; zero setting at any position.
- Resolution: 0.001mm / 0.00005".New words/phrases



Product Specification

Model	Dimension	Division	Accuracy
NKQC-25	0-25mm	0.001mm	± 0.03mm
NKQC-50	25-50mm	0.001mm	± 0.03mm
NKQC-75	50-75mm	0.001mm	± 0.03mm
NKQC-100	75-100mm	0.001mm	± 0.04mm

MICROMETER

Features

- The measuring surface is equipped with a hard alloy tip.
- The smooth chrome-plated surface has clear graduations.
- Equipped with a locking clamp.
- The ratchet locking mechanism or friction sleeve ensures repeatable accuracy.
- Equipped with a reference rod (excluding the 0-25 model).



Product Specification

Model	Dimension	Division	Accuracy
NQC-25	0-25mm	0.01mm	± 0.04mm
NQC-50	25-50mm	0.01mm	± 0.04mm
NQC-75	50-75mm	0.01mm	± 0.05mm
NQC-100	75-100mm	0.01mm	± 0.05mm
NQC-125	100-125mm	0.01mm	± 0.06mm
NQC-150	125-150mm	0.01mm	± 0.06mm
NQC-175	150-175mm	0.01mm	± 0.07mm
NQC-200	175-200mm	0.01mm	± 0.07mm
NQC-225	200-225mm	0.01mm	± 0.08mm
NQC-250	225-250mm	0.01mm	± 0.08mm
NQC-275	250-275mm	0.01mm	± 0.09mm
NQC-300	275-300mm	0.01mm	± 0.09mm

GRADUATION MARKS DIGITAL MICROMETER

Features

- Featuring a movable anvil and built-in dial indicator.
- An ideal choice for comparative measurements of small parts.
- The size is set on the micrometer, and the deviation is read on the dial indicator.
- The anvil can be retracted by pressing a button.
- A rotatable scale for fine adjustment, with an adjustable tolerance mark.



Product Specification

Model	Dimension	Division	Accuracy
NWTB-25A	0-25mm	0.001mm	± 0.03mm
NWTB-25B	0-25mm	0.001mm	± 0.03mm

NEWJIELI

DIIGITAL MICROMETER HEAD

Features

- Tungsten Carbide Flat Measuring Tip (Optional Ball Tip).
- 3V Lithium Battery, IP54 Protection Rating.
- Switch Button, Zeroing Button, Unit Conversion Button (Metric/Imperial), Absolute/Relative Measurement Button.
- Fast Response Speed, no overspeed errors.



Product Specification

Model	Dimension	Division	Accuracy
NSWT–25	0–25mm	0.001mm	± 0.04mm

Features

- The scale markings on the body are made using laser engraving.
- All measuring surfaces are hardened and polished.
- The arc–shaped inner measuring surface allows for precise measurement of internal diameters.
- It has a fine adjustment function.



Product Specification

Model	Dimension	Division	Accuracy
NWT–6.5	0–6.5mm	0.001mm	± 0.04mm
NWT–13	0–13mm	0.001mm	± 0.04mm
NWT–25	0–25mm	0.001mm	± 0.04mm
NWT–50	0–50mm	0.001mm	± 0.04mm

NEWJIELI

IP54 DIGITAL CALIPER WITH INSIDE BLUETOOTH



Features

- IP54 Waterproof
- Class A Electrostatic Protection
- Functions: On/Off, Switch between Metric and Imperial units, Zero setting at any position
- Resolution: 0.01mm / 0.0005"
- Wireless Data Output
- Fast Response Speed: 3m/s with no overspeed error
- 3V Eco-friendly Lithium Battery (Cr2032)
- Measuring Capabilities: Can measure inner and outer diameters, steps, depth, and other dimensions

Product Specification

Model	Range	Division	Accuracy
NLK-150	0-150mm	0.01mm	± 0.03mm
NLK-200	0-200mm	0.01mm	± 0.03mm
NLK-300	0-300mm	0.01mm	± 0.04mm

WATERPROOF ELECTRONIC CALIPER



Features

- IP54 Waterproof
- Class A Electrostatic Protection
- Functions: On/Off, Switch between Metric and Imperial units, Zero setting at any position
- Resolution: 0.01mm / 0.0005"
- Wireless Data Output
- Fast Response Speed: 3m/s with no overspeed error
- 3V Eco-friendly Lithium Battery (Cr2032)
- Measuring Capabilities: Can measure inner and outer diameters, steps, depth, and other dimensions

Product Specification

Model	Range	Division	Accuracy
NFK-150	0-150mm	0.01mm	± 0.03mm
NFK-200	0-200mm	0.01mm	± 0.03mm
NFK-300	0-300mm	0.01mm	± 0.04mm

NEWJIELI

WATERPROOF DIGITAL DEPTH CALIPER



Features

- Arc-shaped inner measuring surface allows for precise measurement of inner diameter dimensions.
- IP54 Waterproof
- Grade A Electrostatic Protection
- Functions: On/Off, Switch between Metric and Imperial units, Zero setting at any position
- Resolution: 0.01mm / 0.0005"
- Data Output
- Fast Response Speed: 3m/s with no overspeed error
- 3V Eco-friendly Lithium Battery (Cr2032)
- With fine adjustment mechanism

Product Specification

Model	Range	Division	Accuracy
NFK-500	0-500mm	0.01mm	±0.05mm
NFK-600	0-600mm	0.01mm	±0.07mm

WATERPROOF DIGITAL DEPTH CALIPER



Features

- Used for depth measurement, measuring groove width dimensions, and groove position dimensions.
- IP54 Waterproof
- Functions: On/Off, Switch between Metric and Imperial units, Zero setting at any position
- Resolution: 0.01mm / 0.0005"
- Fast Response Speed: 3m/s with no overspeed error
- 3V Eco-friendly Lithium Battery (CR2032)

Product Specification

Model	Range	Division	Accuracy
NSK-150	0-150mm	0.01mm	±0.03mm
NSK-200	0-200mm	0.01mm	±0.03mm
NSK-300	0-300mm	0.01mm	±0.04mm

NEWJIELI

SINGLE HOOK DIGITAL DEPTH CALIPER



Features

- Used for depth measurement, measuring groove width dimensions, and groove position dimensions.
- IP54 Waterproof
- Functions: On/Off, Switch between Metric and Imperial units, Zero setting at any position
- Resolution: 0.01mm / 0.0005"
- Fast Response Speed: 3m/s with no overspeed error
- 3V Eco-friendly Lithium Battery (CR2032)

Product Specification

Model	Range	Division	Accuracy
NDSK-150	0-150mm	0.01mm	± 0.03mm
NDSK-200	0-200mm	0.01mm	± 0.03mm
NDSK-300	0-300mm	0.01mm	± 0.04mm

SINGLE HOOK DIGITAL DEPTH CALIPER



Features

- Used for depth measurement, measuring groove width dimensions, and groove position dimensions.
- IP54 Waterproof
- Functions: On/Off, Switch between Metric and Imperial units, Zero setting at any position
- Resolution: 0.01mm / 0.0005"
- Fast Response Speed: 3m/s with no overspeed error
- 3V Eco-friendly Lithium Battery (CR2032)

Product Specification

Model	Range	Division	Accuracy
NSSK-150B	0-150mm	0.01mm	± 0.03mm
NSSK-200B	0-200mm	0.01mm	± 0.03mm
NSSK-300B	0-300mm	0.01mm	± 0.04mm

INSIDE GROOVE DIGITAL CALIPER WITH KNIFE EDGE



Features

- The probe is thin, making it easy to measure the dimensions of narrow grooves inside holes.
- The main scale and measuring jaws are made of hardened stainless steel.
- Functions: On/Off, Switch between Metric and Imperial units, Zero setting at any position
- IP54 Waterproof
- 3V Eco-friendly Lithium Battery
- Resolution: 0.01mm / 0.0005"
- Fast Response Speed: 3m/s with no overspeed error

Product Specification

Model	Range	Division	Accuracy
NDNK-150A	8-150mm	0.01mm	± 0.04mm
NDNK-200A	13-200mm	0.01mm	± 0.04mm
NDNK-300A	15-300mm	0.01mm	± 0.05mm

FLAT HEAD INNER GROOVE DIGITAL CALIPER



Features

- Can measure larger diameter shafts and surface grooves of parts from the end.
- The main scale and measuring jaws are made of hardened stainless steel.
- Functions: On/Off, Metric/Imperial conversion; Zeroing at any position
- IP54 waterproof.
- 3V environmentally friendly lithium battery
- Resolution: 0.01mm/0.0005"
- Fast response speed (3m/s), no overspeed error occurrence

Product Specification

Model	Range	Division	Accuracy
NBNK-150	0-150mm	0.01mm	± 0.03mm
NBNK-200	0-200mm	0.01mm	± 0.03mm
NBNK-300	0-300mm	0.01mm	± 0.04mm

OUTSIDE GROOVE DIGITAL CALIPER WITH FLAT HEAD



Features

- Can measure larger size shafts and surface grooves of parts from the end. The main scale and measuring jaws are made of hardened stainless steel.
- Functions: On/Off, Metric/Imperial conversion; Zero-setting at any position.
- IP54 waterproof.
- 3V environmentally friendly lithium battery.
- Resolution: 0.01mm/0.0005".
- Fast response speed (3m/s), no overspeed errors or malfunctions.

Product Specification

Model	Range	Division	Accuracy
NDWK-150	0-150mm	0.01mm	± 0.04mm
NDWK-200	0-200mm	0.01mm	± 0.04mm
NDWK-300	0-300mm	0.01mm	± 0.05mm

TUBE THICKNESS DIGITAL CALIPER



Features

- The main scale and measuring jaws are made of hardened stainless steel
- Functions: On/Off, Metric/Imperial conversion; Zero-setting at any position
- IP54 waterproof
- 3V environmentally friendly lithium battery
- Resolution: 0.01mm/0.0005"
- Fast response speed (3m/s), no overspeed errors or malfunctions

Product Specification

Model	Range	Division	Accuracy
NGHK-150	0-150mm	0.01mm	± 0.03mm
NGHK-200	0-200mm	0.01mm	± 0.03mm
NGHK-300	0-300mm	0.01mm	± 0.04mm

NEWJIELI

CENTER DISTANCE DIGITAL CALIPER



Features

- Can measure the distance between the plane and the center of the hole
- The main scale and measuring jaws are made of hardened stainless steel
- Functions: On/Off, Metric/Imperial conversion; Zero-setting at any position
- IP54 waterproof
- 3V environmentally friendly lithium battery
- Resolution: 0.01mm/0.0005"
- Fast response speed (3m/s), no overspeed errors or malfunctions.

Product Specification

Model	Range	Division	Accuracy
NZXK-150	0-150mm	0.01mm	±0.04mm
NZXK-200	0-200mm	0.01mm	±0.04mm
NZXK-300	0-300mm	0.01mm	±0.05mm

DIGITAL DISPLAY TIRE TREAD DEPTH RULER



Features

- Used for measuring the depth dimensions of narrow grooves and small holes
- IP54 waterproof
- Functions: On/Off, Metric/Imperial conversion, Zero-setting at any position
- Resolution: 0.01mm/0.0005"
- Response speed: 3m/s with no overspeed errors or malfunctions
- Power: CR2032*1, automatic shutdown after 5 minutes, lifespan of 1 year
- Operating environment: Temperature 0-40° C, relative humidity 80%

Product Specification

Model	Range	Division	Accuracy
NYSK-25	0-25mm	0.01/0.0005"	±0.02mm
NYSK-50	0-50mm	0.01/0.0005"	±0.02mm

WIRELESS ROUND ROD DEPTH GAUGE



Features

- Used for measuring the depth dimensions of narrow grooves and small holes.
- IP54 waterproof
- Functions: On/Off, Metric/Imperial conversion, Zero-setting at any position
- Resolution: 0.01mm/0.0005"
- Wireless Bluetooth data output
- Response speed: 3m/s, no overspeed errors or malfunctions
- Power: CR2032*1, automatic shutdown after 5 minutes, lifespan of 1 year
- Operating environment: Temperature 0-40° C, relative humidity 80%.

Product Specification

Model	Range	Division	Accuracy
NYSK-25A	0-25mm	0.01/0.0005"	± 0.02mm
NYSK-50A	0-50mm	0.01/0.0005"	± 0.02mm

DIAL CALIPER (0.01mm)

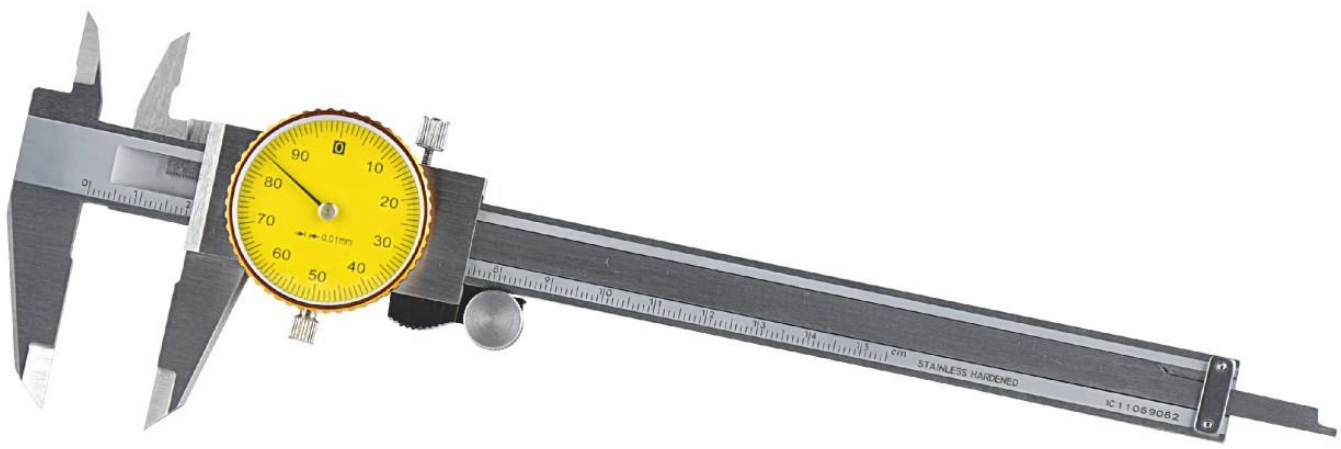

Features

- Can measure four types of dimensions: internal diameter, external diameter, depth, and step
- Made of stainless steel, with good rust resistance
- The indicator dial is shockproof in both directions
- The metal housing has a function to prevent metal chips
- Rotate the dial to set to zero, then lock it.

Product Specification

Model	Range	Division	Accuracy
NBK-150A	0-150mm	0.01mm	± 0.02mm
NBK-200A	0-200mm	0.01mm	± 0.02mm

NEWJIELI

DIAL CALIPER (0.02mm)

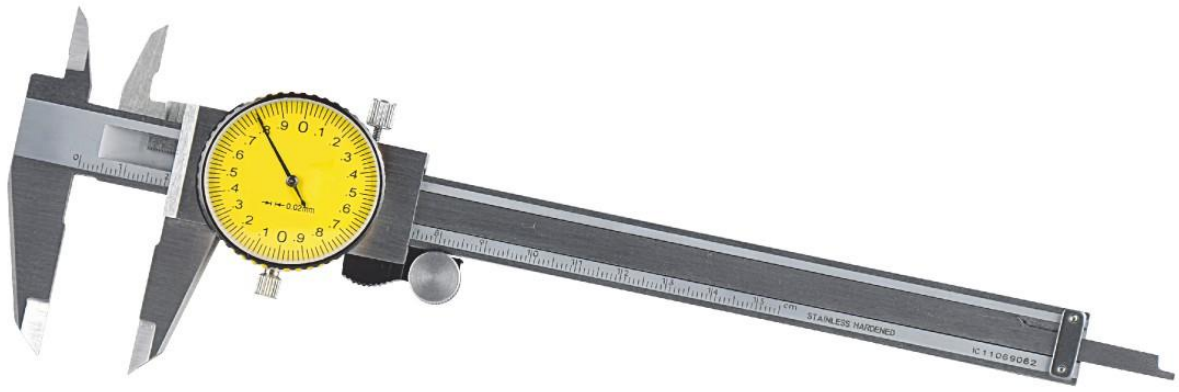

Features

- This product can measure four dimensions: inner diameter, outer diameter, depth, and step.
- Made of stainless steel, offering excellent rust resistance.
- The indicator dial is shockproof in both directions.
- The metal housing is designed to prevent iron filings.
- Rotate the dial to zero and then lock it in place.

Product Specification

Model	Range	Division	Accuracy
NBK–150	0–150mm	0.02mm	± 0.03mm
NBK–200	0–200mm	0.02mm	± 0.03mm
NBK–300	0–300mm	0.02mm	± 0.04mm

DIAL CALIPER (0.02mm)

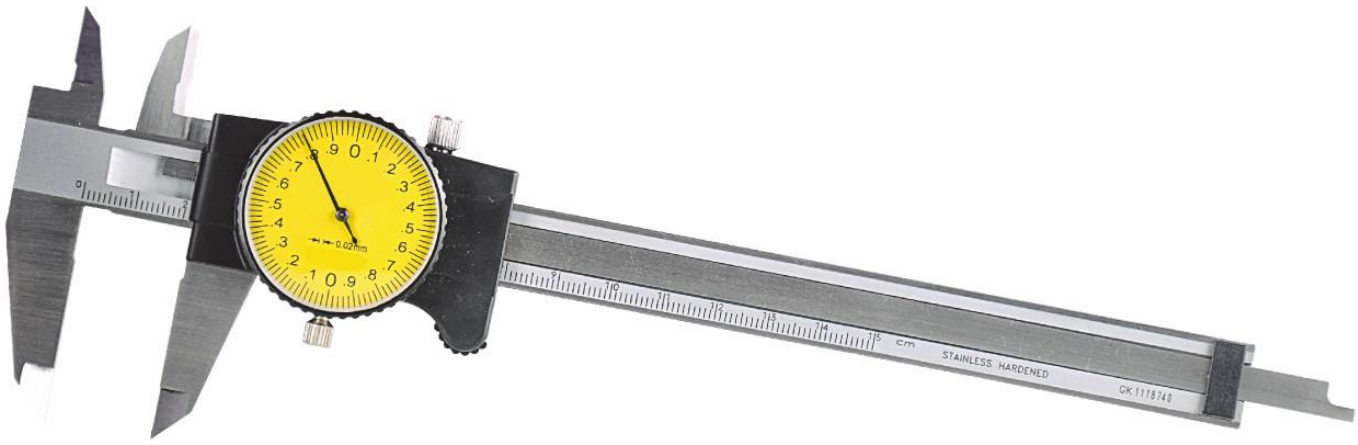

Features

- It can measure four dimensions: inner diameter, outer diameter, depth, and step.
- Made of stainless steel with good rust resistance.
- The indicator dial is shockproof in both directions.
- The metal housing is designed to prevent iron filings.
- Rotate the dial to zero and then lock it in place.

Product Specification

Model	Range	Division	Accuracy
NXBK–150	0–150mm	0.02mm	± 0.03mm
NXBK–200	0–200mm	0.02mm	± 0.03mm

DIAL DEPTH CALIPER (0.02mm)

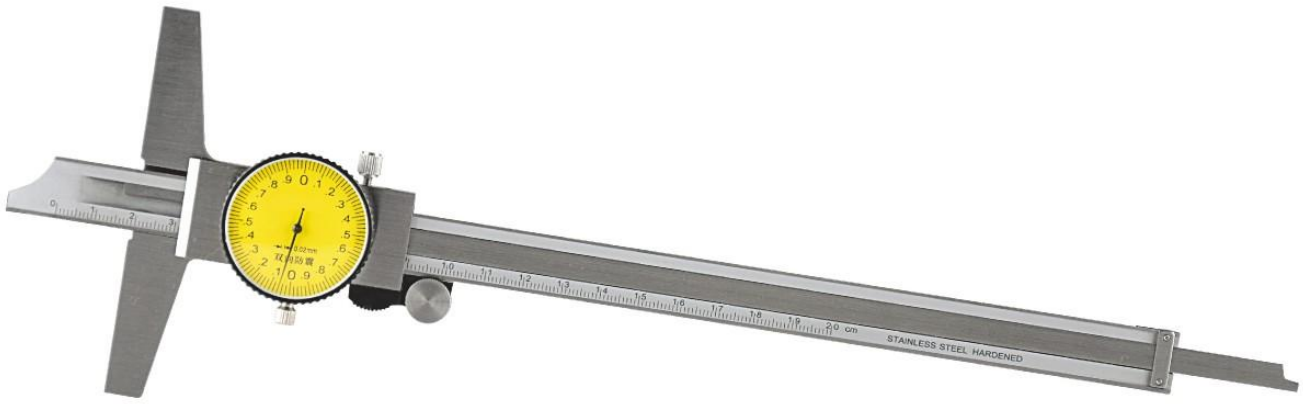

Features

- A measuring instrument primarily for measuring depth.
- Made of stainless steel, with good rust resistance.
- The indicator dial is shock-resistant in both directions.
- The metal casing has the function of preventing iron filings.

Product Specification

Model	Range	Division	Accuracy
NDSK-150	0-150mm	0.02mm	± 0.03mm
NDSK-200	0-200mm	0.02mm	± 0.03mm
NDSK-300	0-300mm	0.02mm	± 0.04mm

VERNIER CALIPER

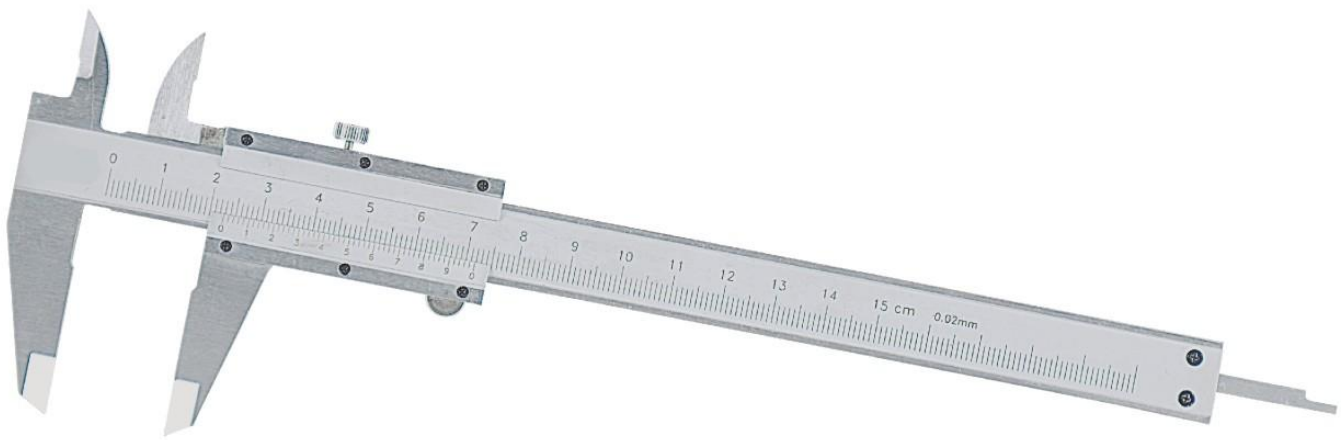

Features

- Can measure four types of dimensions: internal diameter, external diameter, depth, and step.
- The scale body markings are made using laser engraving.
- All measuring surfaces are hardened and polished.

Product Specification

Model	Range	Division	Accuracy
NYK-150	0-150mm	0.02mm	± 0.03mm
NYK-200	0-200mm	0.02mm	± 0.03mm
NYK-300	0-300mm	0.02mm	± 0.04mm

VERNIER CALIPER
(WITHOUT DEPTH MEATUREMENT)



Features

- The scale body markings are made using later engraving
- All measuring surfaces are hardened and polished
- The arc-shaped inner measuring surface can measure the internal diameter dimensions accurately.
- Has a fine adjustment function

Product Specification

Model	Range	Division	Accuracy
NYKIII -300A	0–300mm	0.02mm	± 0.04mm

VERNIER CALIPER TYPE III

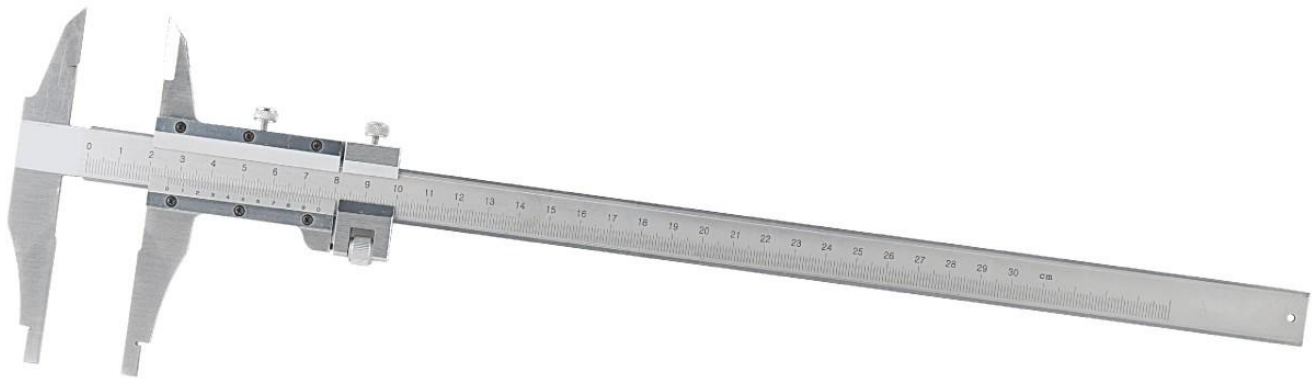

Features

- The scale body markings are made using later engraving
- All measuring surfaces are hardened and polished
- The arc-shaped inner measuring surface can measure the internal diameter dimensions accurately.
- Has a fine adjustment function

Product Specification

Model	Range	Division	Accuracy
NYKIII -300	0–300mm	0.02mm	± 0.04mm

NEWJIELI

HEAVY-DUTY VERNIER CALIPER

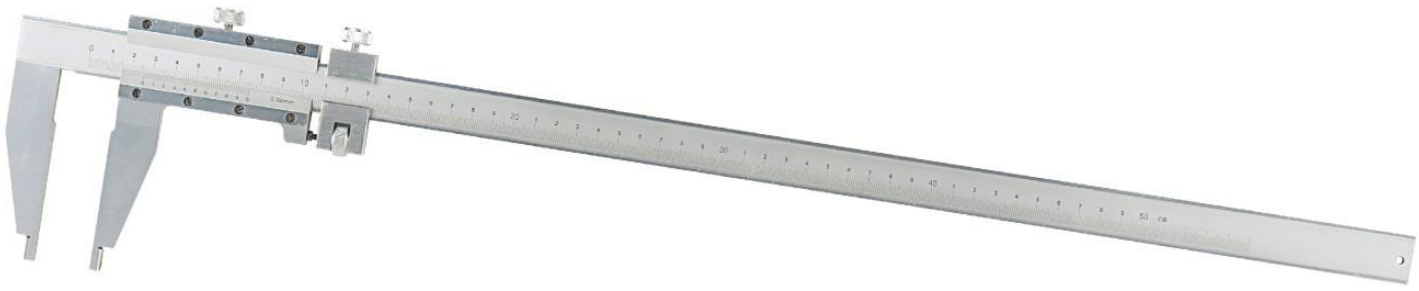

Features

- The scale body markings are made using later engraving
- All measuring surfaces are hardened and polished
- The arc-shaped inner measuring surface can measure the internal diameter
- dimensions accurately.
- Has a fine adjustment function

Product Specification

Model	Range	Division	Accuracy
NZYK-500	0-500mm	0.02mm	± 0.05mm
NZYK-600	0-600mm	0.02mm	± 0.07mm
NZYK-1000	0-1000mm	0.02mm	± 0.07mm
NZYK-1500	0-1500mm	0.02mm	± 0.10mm
NZYK-2000	0-2000mm	0.02mm	± 0.14mm
NZYK-2500	0-2500mm	0.02mm	± 0.18mm
NZYK-3000	0-3000mm	0.02mm	± 0.22mm

DEPTH CALIPER

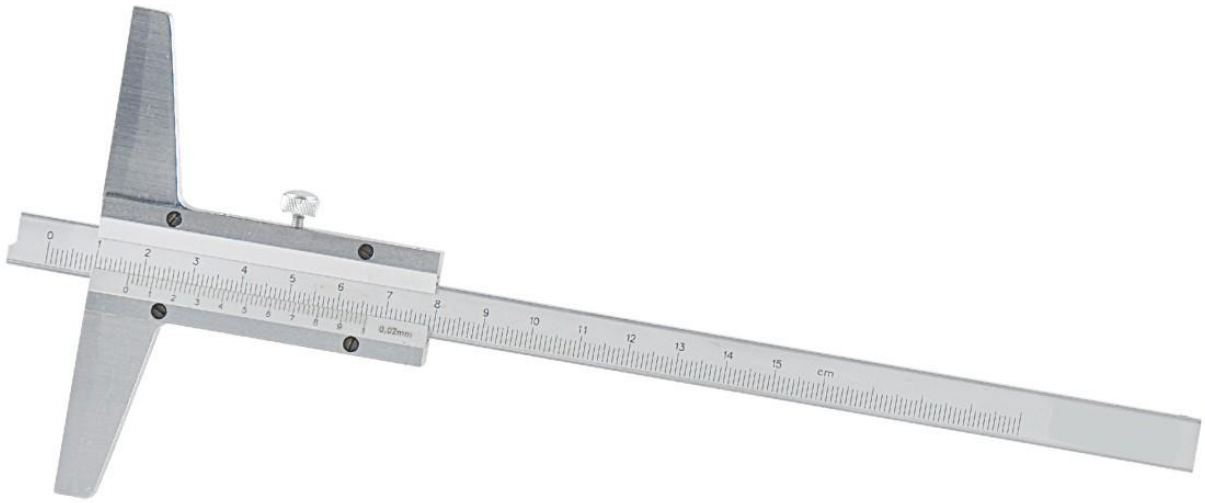

Features

- A measuring instrument primarily for measuring depth.
- Made of stainless steel, with the scale surface chrome-plated, laser-engraved markings, clear lines, and wear-resistant.

Product Specification

Model	Range	Division	Accuracy
NSYK-150A	0-150mm	0.02mm	± 0.03mm
NSYK-200A	0-200mm	0.02mm	± 0.03mm
NSYK-300A	0-300mm	0.02mm	± 0.04mm
NSYK-500A	0-500mm	0.02mm	± 0.05mm

NEWJIELI

HORIZONTAL TYPE DIGITAL CALIPER

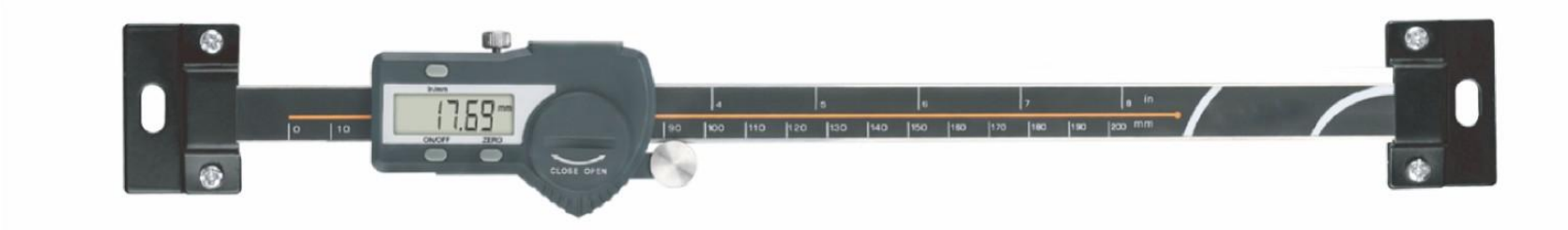

Features

- IP54 Waterproof
- Rating Features: On/Off switch, Metric/Imperial conversion, zeroing at any position
- Resolution: 0.01 mm/0.0005"
- High Response Speed: Up to 3 m/s without overspeed errors
- Eco-Friendly 3V Lithium Battery: Cr2032
- Equipped with Two Fixed Brackets: One at each end

Product Specification

Model	Range	Division	Accuracy
NHC-100	0-100mm	0.01mm	± 0.0mm
NHC-150	0-150mm	0.01mm	± 0.03mm
NHC-200	0-20mm	0.01mm	± 0.03mm
NHC-300	0-300mm	0.01mm	± 0.04mm

DIGITAL SCALES (PERPENDICALAR)

Features

- Used for Measurement and Positioning: During machining or machine tool assembly, it measures and positions assembly components fixed on the fixture.
- Fixable at Any Position.
- Data Output
- Capability.
- High Response Speed: Up to 3 m/s without overspeed errors.
- No Power-On Crashes.



Product Specification

Model	Range	Division	Accuracy
NSC-100	0-100mm	0.01mm	± 0.02mm
NSC-150	25-150mm	0.01mm	± 0.02mm
NSC-200	50-200mm	0.01mm	± 0.02mm
NSC-300	75-300mm	0.01mm	± 0.02mm

DIGITAL DISPLAY SCALE (ALUMINUM ALLOY)

Features

- Measurement and Positioning for Assemblies: Used during machining or machine tool assembly to measure and position assemblies fixed on the fixture.
- Fixable at Any Position.
- Supports Data Output.
- High Response Speed: Up to 3 m/s without overspeed errors.
- No Power-On Freezing Issues.



Product Specification

Model	Range	Division	Accuracy
NWLC-150	0-150mm	0.01mm	±0.05mm
NWLC-200	0-200mm	0.01mm	±0.07mm
NWLC-300	0-300mm	0.01mm	±0.10mm
NWLC-500	0-500mm	0.01mm	±0.15mm
NWLC-600	0-600mm	0.01mm	±0.20mm

HEIGHT GAUGE

Features

- Made of Stainless Steel
- Satin Chrome-Finished Scale: Engraved lines are clear and easy to read.
- Equipped with a Fine Adjustment Device
- Ensures High-Precision Measurement Requirements
- Comes with an Elegant Wooden Case
- Carbide-Tipped Scribing Jaws
- Base is Fully Hardened



Dual-Column
Digital Display



Dual-Column
with Dial Indicator

Product Specification

Model	Range	Division	Accuracy
NSGC-300	0-300mm	0.02mm	±0.04mm
NSGC-500	0-500mm	0.02mm	±0.05mm
NSGC-600	0-600mm	0.02mm	±0.06mm

NEWJIELI

DIGITAL HEIGHT GAUGE WITH SINGLE BEAM

Features

- Grade A Electrostatic Protection
- Measuring Speed: 3 m/s
- Extra-Large LCD Display
- Carbide-Tipped Measuring Jaws
- Zero Setting at Any Position
- Metric/Imperial Conversion at Any Position
- Data Output
- Function: (Requires additional data cable)

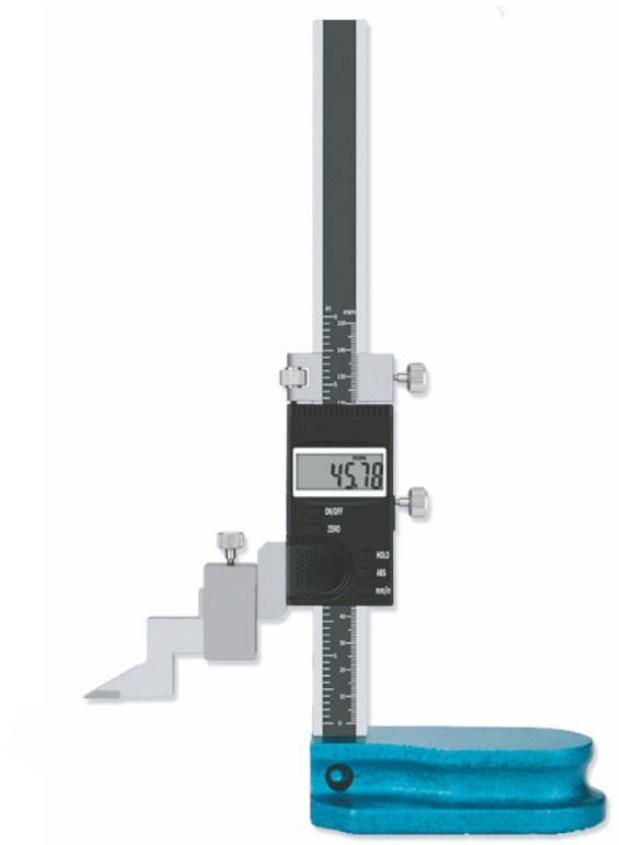

Product Specification

Model	Range	Division	Accuracy
NDGC-150A	0-150mm	0.01mm	± 0.03mm
NDGC-300A	0-300mm	0.01mm	± 0.04mm

MEASURING TABLE

Features

- Application: For measuring the flatness and parallelism of precision components
- Grade: Grade 00 (0.002)



Product Specification

Model	Division	Accuracy
NHT-150	150 X 100mm	± 0.02mm
NHT-200	200 X 150mm	± 0.02mm
NHT-300	300 X 200mm	± 0.02mm
NHT-500	400 X 300mm	± 0.02mm
NHT-600	600 X 400mm	± 0.02mm

TEST INDICATOR BASE



NGZ

PRESSURE GAUGE NEEDLE DEVICE



NYBQ

MAGNETIC STAND



NWCZ

MICROMETER STAND



NQZ

NEWJIELI

Focused on providing high-quality measurement tools and instruments

Indicator series

- HIGH QUALITY
- COMPETITIVE PRICE
- ONE-STOP SERVICE
- OEM&ODM PROVIDED



NEWJIELI

RASTER INDICATOR (BUILT-IN BLUETOOTH TRANSMISSION)

Features

- Functions: Power on/off, reset, metric/imperial system, data hold, Max/Min measurement, preset value settings, upper and lower limit parameters
- Operating Temperature: –10 to 40° C
- Humidity: ≤80% RH
- Battery: 3.7V lithium battery (rechargeable)
- Analog Needle Absolute Measurement (using absolute encoding grating)
- Waterproof Rating: IP54/IP65
- Auto Power Off: Can be set to automatically power off after 1–99 minutes of inactivity
- Bluetooth Wireless Connection: Connects to a mobile app for one–click data reading (data can be exported to generate tables, a helpful tool to replace traditional manual data entry for gauge



0-12.7(IP54)

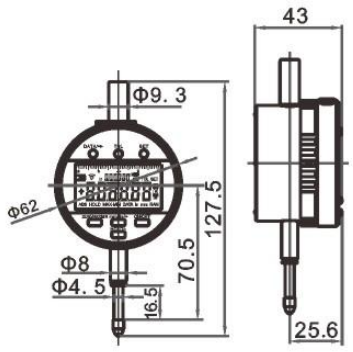

0-12.7mm (IP54)

Product Specification

Model		Range (mm)	Accuracy	Resolution	Waterproof rating
NGSL–5331	NGSL–F5331	0–12.7	≤10μm	5μm	IP54/IP65
NGSL–5301	NGSL–F5301		±3 μm	1μm	IP54/IP65
NGSL–5311	NGSL–F5311		≤3 μm	0.5μm	IP54/IP65
NGSL–5321	NGSL–F5321		≤1.4μm	0.2μm	IP54/IP65
NGSL–5331		0–25.4	≤10μm	5μm	IP54
NGSL–5301			±3 μm	1μm	IP54
NGSL–5311			≤3 μm	0.5μm	IP54
NGSL–5321			≤1.8μm	0.2μm	IP54
NGSL–5331		0–50.8	≤10μm	5μm	IP54
NGSL–5301			±3 μm	1μm	IP54
NGSL–5311			≤3 μm	0.5μm	IP54



0-12.7(IP65)

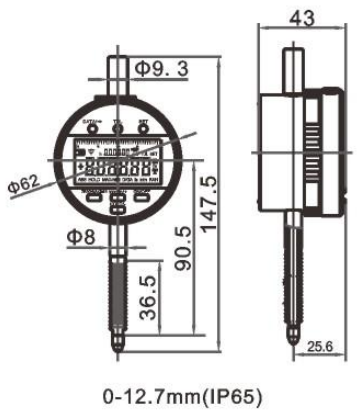

0-12.7mm(IP65)

Optional measuring head (mm)

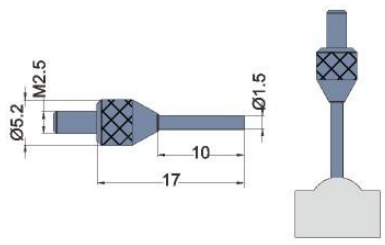

150720

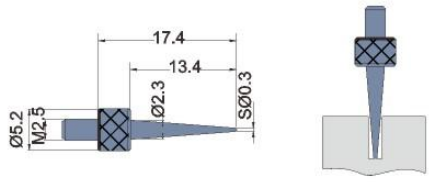

150721

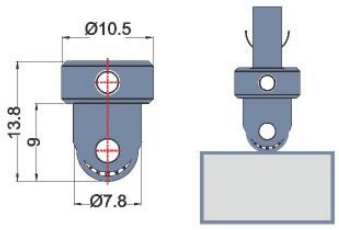

150722



0-25.4mm(IP54)

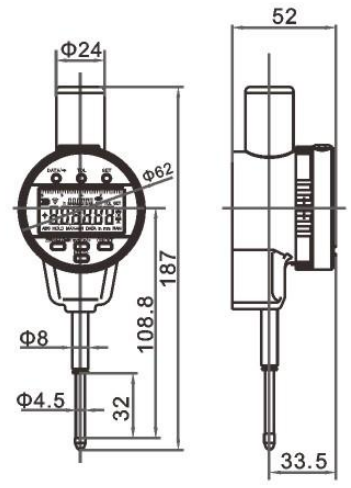

0-25.4mm

Bluetooth APP Measurement Interface Diagram

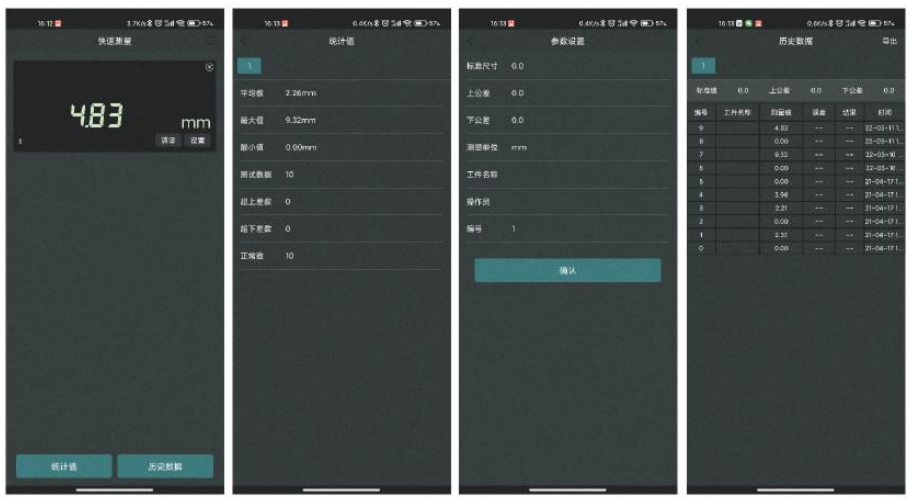



0-50.8mm(IP54)

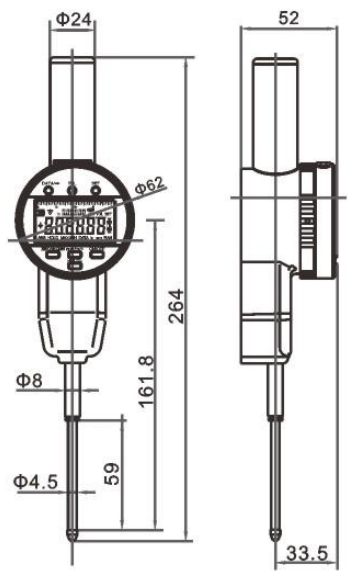

0-50.8mm

NEWJIELI

RASTER INDICATOR (4 KEYS)

Features

- Functions: Power on/off,Reset,Metric/Imperial system switch ,Data hold, Maximum/Minimum measurement
- Operating Temperature:−10 to 40° C
- Humidity:80% RH
- Battery:3.7V lithium battery(rechargeable)
- Analog Needle
- Measurement Type: Absolute measurement (using absolute encoding grating
- Waterproof Rating:IP54/IP65
- Auto Power Off: Can be set to automatically power off after 1−99 minutes of inactivity



0-12.7(IP54)

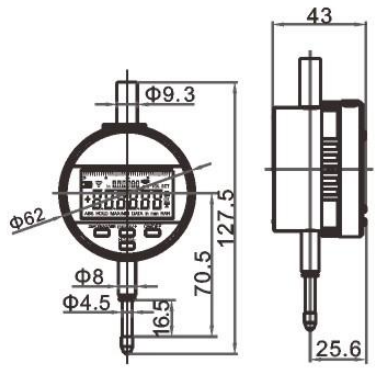

0-12.7mm (IP54)

Product Specification

Model		Range (mm)	Accuracy	Resolution	Waterproof rating
NGS4−5331	NGS4−F5331	0−12.7	≤10μm	5μm	IP54/IP65
NGS4−5301	NGS4−F5301		±3 μm	1μm	IP54/IP65
NGS4−5311	NGS4−F5311		≤3 μm	0.5μm	IP54/IP65
NGS4−5321	NGS4−F5321		≤1.4μm	0.2μm	IP54/IP65
NGS4−5331		0−25.4	≤10μm	5μm	IP54
NGS4−5301			±3 μm	1μm	IP54
NGS4−5311			≤3 μm	0.5μm	IP54
NGS4−5321			≤1.8μm	0.2μm	IP54
NGS4−5331		0−50.8	≤10μm	5μm	IP54
NGS4−5301			±3 μm	1μm	IP54
NGS4−5311			≤3 μm	0.5μm	IP54



0-12.7(IP65)

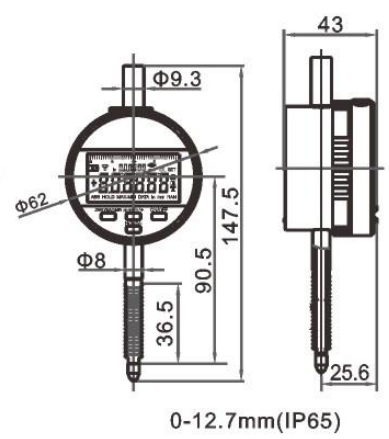

0-12.7mm(IP65)

Optional measuring head (mm)

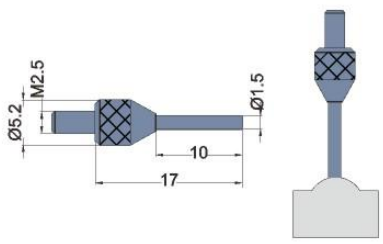

150720

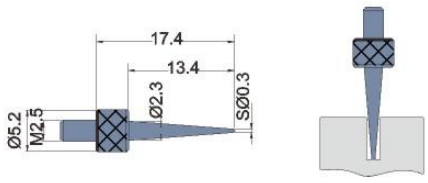

150721

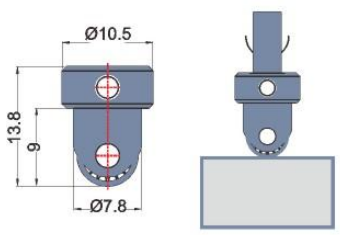

150722



0-25.4mm

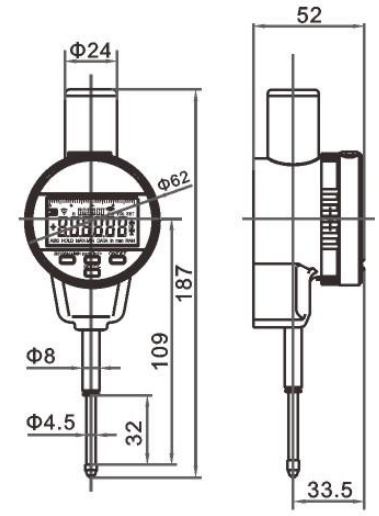

0-25.4mm



0-50.8mm

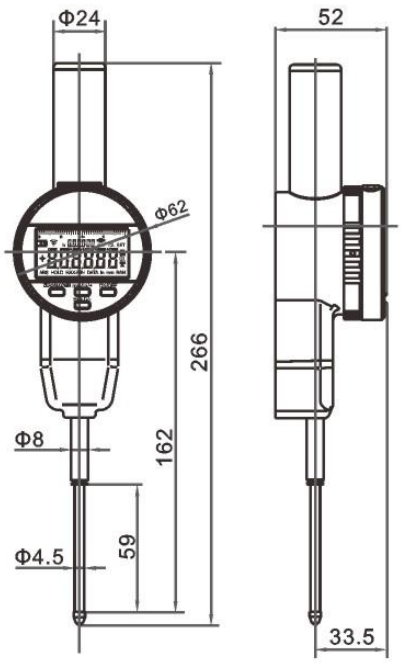

0-50.8mm

NEWJIELI

DIGITAL INDICATOR

Features

- Grade A Electrostatic Protection
- Functions:Power on/offMetric/Imperial conversion; Zero setting at any position
- Resolution:0.01mm / 0.0005"
- Support: Wireless Bluetooth; Wireless RF; Data output function
- Response Speed : Fast response (3m/s); No overspeed errors
- No Power-On Freezing Fault
- Battery:3V environmentally friendly lithium battery
- Probe : Hard carbide probe

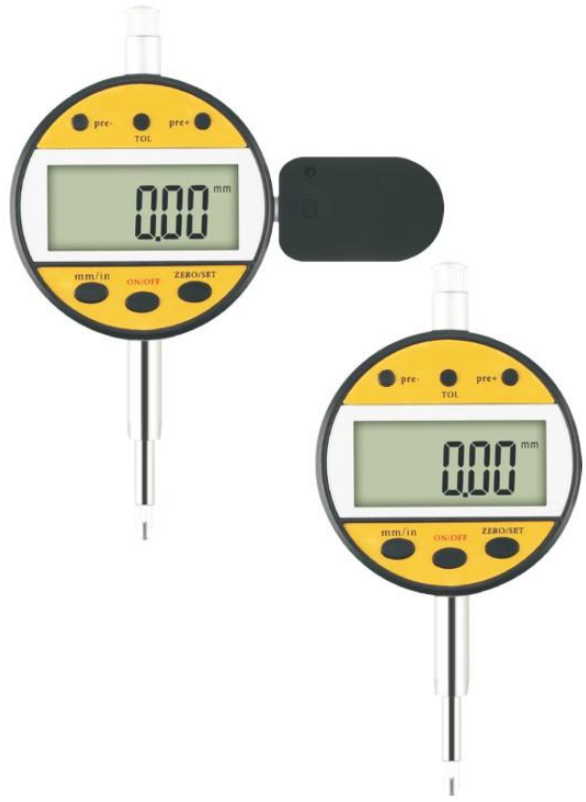

Product Specification

Model	Range	Division	Accuracy
NSBB-10B	0-10mm	0.001mm	±0.02mm
NSBB-25B	0-25mm	0.001mm	±0.03mm

LEVERAGE DIAL INDICATOR

Features

- Grade A Electrostatic Protection
- Functions: Power on/off； Metric/Imperial conversion； Zero setting at any position
- Resolution:0.01mm / 0.0005"
- Data Output
- Response Speed:3m/sNo overspeed errors
- No Power-On Freezing Fault
- Power Supply:3V environmentally friendly lithium battery CR2032 *1
- Hard carbide probe
- Operating Environment :Temperature: 0-40° C； Relative Humidity: 80%



Product Specification

Model	Range	Division	Accuracy
NSBB-10A	0-10mm	0.01/0.0005"	±0.02mm
NSBB-25A	0-25mm	0.01/0.0005"	±0.03mm
NSBB-50A	0-50mm	0.01/0.0005"	±0.04mm

NEWJIELI

DIAL INDICATOR

Features

- The main moving parts are made of special wear-resistant stainless steel, offering excellent wear resistance and rust prevention.
- The structure is simple, easy to use and maintain, with high sensitivity and stable, reliable accuracy.
- The scale dial is clear and easy to read.
- Shock-resistant rack structure.
- Tungsten carbide probe.



Product Specification

Model	Range	Division	Accuracy
NBB-5	0-5mm	0.01mm	±0.016mm
NBB-10	0-10mm	0.01mm	±0.020mm
NBB-20	0-20mm	0.01mm	±0.030mm
NBB-30	0-30mm	0.01mm	±0.030mm
NBB-50	0-50mm	0.01mm	±0.040mm

LEVERAGE DIAL INDICATOR

Features

- Can accurately and easily measure narrow and recessed surfaces, as well as difficult-to-measure inner and outer diameter dimensions
- Special device used to automatically change the measurement direction
- The measuring lever connection is embedded in precision ball bearings



Ruby version

Product Specification

Model	Range	Division	Accuracy
NGB-08	0-0.8mm	0.01mm	±0.02mm
NGB-08A	0-0.8mm	0.01mm	±0.02mm



Standard version

NEWJIELI

DIGITAL MICRON INDICATOR

Features

- Grade A Electrostatic Protection
- Functions : Power on/off； Metric/Imperial conversion； Zero setting at any position
- Resolution:0.001mm / 0.00005"
- Data Output
- Response Speed: Fast response (3m/s)No overspeed errors
- No Power-On Freezing Fault
- 3V environmentally friendly lithium battery
- Hard carbide probe



Product Specification

Model	Range	Division	Accuracy
NSQB-10	0-10mm	0.001mm	± 0.04mm
NSQB-25	0-25mm	0.001mm	± 0.05mm
NSQB-50	0-50mm	0.001mm	± 0.06mm

LEVERAGE DIAL INDICATOR

Features

- Can accurately and easily measure narrow and recessed surfaces, as well as difficult-to-measure inner and outer diameter dimensions
- Special device used to automatically change the measurement direction
- The measuring lever connection is embedded in precision ball bearings



Ruby version

Product Specification

Model	Range	Division	Accuracy
NGQ-02	0-0.2mm	0.002mm	± 0.004mm
NGQ-02A	0-0.2mm	0.002mm	± 0.004mm



Standard version

NEWJIELI

DIGITAL MICRON INDICATOR

Features

- The main moving parts are made of special wear–resistant stainless steel, offering excellent wear resistance and rust prevention.
- The structure is simple, easy to use and maintain, with high sensitivity and stable, reliable accuracy.
- The scale dial is clear and easy to read.
- The rack features a shock–resistant design.
- Tungsten carbide probe.



Product Specification

Model	Range	Division	Accuracy
NQB–1	0–1mm	0.001mm	± 0.005mm

DIGITAL THICKNESS GAUGE

Features

- Grade A Electrostatic Protection
- Functions : Power on/off； Metric/Imperial conversion； Zero setting at any position
- Resolution:0.001mm / 0.00005"
- Data Output
- Response Speed: Fast response (3m/s)No overspeed errors
- No Power–On Freezing Fault
- 3V environmentally friendly lithium battery
- Ceramic Probe and Hard Carbide Probe



Product Specification

Model	Range	Division	Accuracy	Throat Depth
NSHG–10	0–10mm	0.01mm	± 0.03mm	30mm
NSHG–10A	0–10mm	0.01mm	± 0.03mm	30mm
NSHG–10B	0–10mm	0.01mm	± 0.03mm	30mm
NSHG–20	0–20mm	0.01mm	± 0.03mm	30mm

NEWJIELI

DIGITAL THICKNESS GAUGE

Features

- Grade A Electrostatic Protection
- Functions: Power on/off; Metric/Imperial conversion; Zero setting at any position
- Resolution:0.001mm / 0.00005"
- Data Output
- Response Speed:Fast response (3m/s)No overspeed errors
- No Power-On Freezing Fault
- 3V environmentally friendly lithium battery
- Hard carbide probe



Product Specification

Model	Range	Division	Accuracy	Throat Depth
NSQH-10	0-10mm	0.001mm	± 0.009mm	30mm
NSQH-10A	0-10mm	0.001mm	± 0.009mm	30mm
NSQH-10B	0-10mm	0.001mm	± 0.009mm	30mm

DIGITAL THICKNESS GAUGE WITH FLAT HEAD

Features

- Hard carbide probe
- Functions: Power on/off; Metric/Imperial conversion; Zero setting at any osition
- Resolution:0.001mm / 0.00005"
- Data Output
- No Power-On Freezing Fault
- 3V environmentally friendly lithium battery



Product Specification

Model	Range	Division	Accuracy	Throat Depth
NSBH-P-10	0-10mm	0.01mm	± 0.03mm	120mm
NSBH-P-20	0-20mm	0.01mm	± 0.03mm	120mm

NEWJIELI

DIGITAL THICKNESS GAUGE WITH FLAT HEAD

Features

- Grade A Electrostatic Protection
- Functions: Power on/off; Metric/Imperial conversion; Zero setting at any position
- Resolution:0.001mm / 0.00005"
- Data Output
- The response speed is fast (3 m/s), and no overspeed errors have occurred.
- No power-up freeze faults have occurred
- Ceramic probe



Product Specification

Model	Range	Division	Accuracy	Throat Depth
NGQH-P-10	0-10mm	0.001mm	± 0.09mm	120mm
NGQH-P-20	0-20mm	0.001mm	± 0.09mm	120mm

DIGITAL DIAL CONTINUOUS THICKNESS GAUGE

Features

- Grade A Electrostatic Protection
- Resolution:0.001mm / 0.00005"
- Data Output
- No power-up freeze faults have occurred
- Functions: Power on/off; Metric/Imperial conversion; Zero setting at any position
- The response speed is fast (3 m/s), and no overspeed errors have occurred.



Product Specification

Model	Range	Division	Accuracy	Throat Depth
NBLH-10A	0-10mm	0.01mm	± 0.03mm	100mm

NEWJIELI

MICROMETER CONTINUOUS THICKNESS GAUGE

Features

- Grade A Electrostatic Protection
- Function: On/Off, Metric/Imperial unit conversion, Zero setting at any position
- Resolution: 0.001mm/0.00005"
- Data output
- Fast response speed (3 m/s), no overspeed error faults
- No power-up freeze faults
- The probe automatically closes when not in use.
- Equipped with a probe with rollers for continuous measurement of strip-shaped objects



Product Specification

Model	Range	Division	Accuracy	Throat Depth
NQLH-10A	0-10mm	0.001mm	± 0.009mm	100mm
NQLH-10B	0-10mm	0.001mm	± 0.009mm	100mm

THICKNESS GAUGE

Features

- Equipped with a shock-resistant dial indicator with a jeweled bearing
- Equipped with a quick lifting device for the measuring rod
- Equipped with an outer ring locking device
- Ceramic probe



Product Specification

Model	Range	Division	Accuracy
NCH-10	0-10mm	0.01mm	± 0.03mm

NEWJIELI

TUBE THICKNESS DIGITAL GAUGE

Features

- Zero setting at any position;
- ON/OFF key
- Metric/Imperial unit conversion key at any position



Product Specification

Model	Range	Division	Accuracy	Throat Depth
NBGH–10	0–10mm	0.01mm	± 0.03mm	30mm
NBGH–10A	0–10mm	0.01mm	± 0.03mm	60mm

DIGITAL MICRON THICKNESS GAUGE

Features

- Zero setting at any position;
- ON/OFF key
- Metric/Imperial unit conversion key at any position



Product Specification

Model	Range	Division	Accuracy	Throat Depth
NQGH–10	0–10mm	0.001mm	± 0.09mm	30mm
NQGH–10A	0–10mm	0.001mm	± 0.09mm	60mm

NEWJIELI

GRATING MICROMETER INDICATOR DEPTH GAUGE

Features

- The main moving parts are made of special wear-resistant stainless steel, providing excellent wear resistance and rust prevention.
- The structure is simple, easy to use and maintain, with high sensitivity and stable, reliable accuracy Tungsten carbide probe
- Class A electrostatic protection.
- Functions: Power on/off, Metric/Imperial unit conversion, Zero setting at any position
- Resolution: 0.01mm/0.0005"
- Data output.
- Fast response speed (3 m/s), no overspeed error faults



Product Specification

Model	Range	Division	Accuracy
NQSB-10	0-10mm	0.001mm	±0.04mm
NQSB-25	0-25mm	0.001mm	±0.05mm
NQSB-50	0-50mm	0.001mm	±0.06mm

DIGITAL INDICATOR DEPTH GAUGE

Features

- The main moving parts are made of special wear-resistant stainless steel, providing excellent wear resistance and rust prevention
- The structure is simple, easy to use and maintain, with high sensitivity and
- stable, reliable accuracy
  Tungsten carbide probe
  Class A electrostatic protection.
  Functions: Power on/off, Metric/Imperial unit conversion, Zero setting at any position
  Resolution: 0.01mm/0.0005"
  Data output.
  Fast response speed (3 m/s), no overspeed error faults



Product Specification

Model	Range	Division	Accuracy
NSSB-10	0-10mm	0.01mm	±0.02mm
NSSB-25	0-25mm	0.01mm	±0.03mm
NSSB-50	0-50mm	0.01mm	±0.04mm

NEWJIELI

INSIDE DIGITAL CALIPER GAUGE

Features

- Used for measuring holes and internal grooves
- The gear drive offers high reliability
- Tungsten carbide contact



Product Specification

Model	Range	Division
NKNG-165A	12.7-165mm	0.05mm
NKNG-165B	12.7-165mm	0.05mm

OUTSIDE DIGITAL CALIPER GAUGE

Features

- Tungsten carbide contact
- Widely used for measuring models, castings, forgings, dies, sheet materials, and other workpieces with less stringent precision requirements.
- The wide neck depth is designed for measuring non-standard flat workpieces, allowing easy measurement of their thickness.



Product Specification

Model	Range	Division	Accuracy
NKWG-150C	0-150mm	0.01mm	±0.05mm
NKWG-150D	0-150mm	0.01mm	±0.05mm

NEWJIELI

DIGITAL CALIPER GAUGE





Product Specification

Model	Range	Division	Accuracy
NKG–25	0–25mm	0.01mm	±0.05mm

Features

- Tungsten Carbide Contact
- Suitable for measuring the inner diameter of various types of sheet materials