NEWJIELI

Focused on providing high-quality measurement tools and instruments

Hardness series

- HIGH QUALITY
- COMPETITIVE PRICE
- ONE-STOP SERVICE
- OEM&ODM PROVIDED







NEWJIELI

DIGITAL LEEB HARDNESS TESTER

Product Overview

The digital Leeb hardness tester is a hardness testing instrument for metal materials developed based on the popular Leeb hardness measurement principle in the world. It features high precision, small size, simple operation and a wide measurement range. It is especially suitable for large and heavy forgings and castings, such as rolls, turbine shafts, etc., and is also applied to components that have been installed and cannot be disassembled, like pressure vessels, turbine units and other equipment. Therefore, the Leeb hardness tester is widely used in industries such as petrochemicals, aerospace, electric power, gas, automobiles, ships, railways, and mechanical manufacturing.



NTH-110 (With printer)



NTH-120A (Without printer)



NTH-120B (Without printer)

Main Function

- It can test a variety of materials.
- It is small in size and light in weight, and is very suitable for on-site inspection.
- The testing direction is not restricted.
- It can print test results.
- Data can be modified at any time.
- It can automatically detect the battery voltage and give a low-voltage prompt.
- The large screen can display multiple parameters.

Measurement Range

- Note 1: When the measured value exceeds the range, the screen will display "EEE" (Error)
- Note 2: The blank in the table is non-exchangeable
- Measurement accuracy ± 8HL (arithmetic mean of 5 points at HL. D = 800)
- Working temperature: 0~ 409℃
- Storage temperature: -20~ 50℃
- Working voltage: 4.7V~ 6.0V
- Power supply: 4 1100mAH rechargeable batteries
- Charging current: not more than 200mA
- Weight of hardness tester: 580g (with D impact device)
- Host dimensions: 23 x 39 x 131 (mm)
- Printing paper specification: ϕ40x44 web printing paper

Product Specification

Materials	Hardness value					
	HLD	HRC	HRB	HB	HV	HS
Steel and cast steel G/ZG	300-890	20.0-68.0	38.4-99.5	80-650($F=30D^2$)	80-950	32.5-99.5
Alloy tool steel GJG	300-840	20.4-67.0			80-900	
Ray cast iron HT	360-650			93-334($F=30D^2$)		
Ductile iron QT	400-660			131-387($F=30D^2$)		
Aluminum alloy ZT	200-560			30-159($F=10D^2$)		
Brass H	200-550		13.5-95.3	40-173($F=10D^2$)		
Bronze Q				60-290($F=10D^2$)		
Pure copper T	200-690			45-315($F=10D^2$)		
Bearing steel G		28.0-58.0				

NEWJIELI

LXD DIGITAL SHORE HARDNESS TESTER

Product Overview

Digital shore hardness tester is an apparatus to measure vulcanized rubber and plastic products. This apparatus has three models of Type A, Type C and Type D. Type A and D respectively are applicable to the testing of low and medium hardness, and high-hardness materials. Type C applies to the testing of microporous material which is used to make shoes, with compression rate 50 percent, stress 0.049 MPa or above, and this kind of material is made of rubber plastic and has blister in plastic. This hardness tester conforms to the regulations of GB/T531, GB2411, HG/T2489, JB6148.



LXD-A



LXD-C



LXD-D

Technical Data

- Measuring range: 0~100HBD
- Measurement error: within 20~90HBD, the error is less than 1HBD
- Resolution: 0.1HBD
- Pressure needle range: 0~2.5mm
- Pressure at the end of the needle: Type A&C(0.55N~8.05N),Type D(0~44.5N)

LX-A SHORE HARDNESS TESTER

Product Overview

The pointer Shore hardness tester is widely used in the hardness testing of vulcanized rubber and plastic products. It has the characteristics of simple structure, easy use, light body, and intuitive reading. It can be carried around for handheld measurement, or it can be installed on the same type of Shore hardness tester test bracket produced for fixed load testing. Compliant with standards DIN53505, ASTM D2240, ISO/R868, JIS R7215.

Features

LX-A hardness tester is widely used in the hardness testing of medium and low hardness plastics, various types of rubber, polygrease, leather, wax, etc. The product is produced according to ISO868 and ISO7619 international standards and conforms to GB/T531, JB6148 and JJG304 standards.

Technical Data

- Measuring range: 0~100HD
- Recommended measurenment range: 20~90HD
- Outline dimension: 115x60x25mm
- Pressure needle range: 2.5mm
- End pressure of pressure head: SR0.79mm
- Net weight: ~0.5kg



LX-A-1 (Single needle)



LX-A-2 (Double needle)

LX-C SHORE HARDNESS TESTER

Product Overview

The pointer Shore hardness tester is widely used in the hardness testing of vulcanized rubber and plastic products. It has the characteristics of simple structure, easy use, light body, and intuitive reading. It can be carried around for handheld measurement, or it can be installed on the same type of Shore hardness tester test bracket produced for fixed load testing. Compliant with standards DIN53505, ASTM D2240, ISO/R868, JIS R7215.

Features

LX-C hardness tester is used in measuring the hardness of oak model microporous meterial which includes vesicant, when the compression ratio is 50% the stress above 0.5kg/cm². It also can be used in other similar hardness materials. The product meets the requirements of HG/T2489 and other related standards.

Technical Data

- Measuring range: 0~100HD
- Recommended measurenment range: 20~90HD
- Outline dimension: 115x60x25mm
- Pressure needle range: 2.5mm
- End pressure of pressure head: SR2.5mm
- Net weight: ~0.5kg



LX-C-1 (Single needle)



LX-C-2 (Double needle)

LX-D SHORE HARDNESS TESTER

Product Overview

The pointer Shore hardness tester is widely used in the hardness testing of vulcanized rubber and plastic products. It has the characteristics of simple structure, easy use, light body, and intuitive reading. It can be carried around for handheld measurement, or it can be installed on the same type of Shore hardness tester test bracket produced for fixed load testing. Compliant with standards DIN53505, ASTM D2240, ISO/R868, JIS R7215.

Features

LX-D hardness tester is suitable for hardness testing of general hard rubber, hard resin, acrylic, plexiglass, thermoplastic, printing board, fiber and other high hardness materials. The products meet the requirements of HG/T2489 and other related standards.

Technical Data

- Measuring range: 0~100HD
- Recommended measurenment range: 20~90HD
- Outline dimension: 115x60x25mm
- Pressure needle range: 2.5mm
- End pressure of pressure head: SR0.1mm
- Net weight: ~0.5kg



LX-D-1 (Single needle)



LX-D-2 (Double needle)

NEWJIELI

BARCOL HARDNESS TESTER

Features

- Convenient and Lightweight Design: It is a portable indentation hardness tester. It can be operated with one hand and requires no prior experience.
- Wide Measurement Range: It has a broad measurement range, capable of testing everything from very soft pure aluminum to extremely hard aluminum alloys. Its effective measurement range is equivalent to Brinell hardness of 25 – 150HBW.
- Diversified Application Areas: It has a wide range of applications. The model 934 – 1 can be used to test aluminum and aluminum alloys, copper and copper alloys, fiberglass reinforced plastics, hard plastics, etc. Its improved version can be used to test extremely soft metals such as lead and tin, as well as soft plastics, rubber, felt, leather, etc.
- High Detection Sensitivity: It features high sensitivity with 100 graduations on the instrument, and its sensitivity is much higher than that of the Webster hardness tester commonly used in the aluminum alloy industry.
- Unique Testing Method: Tests can be conducted by simply touching one side of the specimen without having to move or support the specimen. It is suitable for super–large and super–thick workpieces and assemblies.
- Convenient Hardness Conversion: Hardness conversion is convenient.
- Through conversion tables, hardness values such as Brinell, Rockwell, Vickers and Webster hardness values can be obtained.
- Strict Compliance with Standards: It complies with the Chinese standard GB/T 3854 – 2005 and the American standard ASTM B648 – 2000.



NBY–1

Technical Data

- Measurement range: 0~100HBa
- Resolution: 0.5 HBa
- Press needle: Truncated cone with an angle of 26° , and the diameter of the conical surface is 0.176 mm
- Indication error:Hardness range 42–52HBa ± 2HBa Hardness range84–88HBa ± 1HBa
- Repeatability error:Hardness range42–52HBa ± 2HBa Hardness range84–88HBa ± 1HBa
- Weight: 0.5kg

SPONGE HARDNESS TESTER

Product Overview

The LX–F Sponge Hardness Tester is a special product customized by our factory to make it convenient for customers to measure the hardness of foam materials. It is suitable for measuring the hardness of soft foam materials, polyurethane foam rubber products.



Technical Data

- Press stroke range: 0~2.5mm
- Dial value: 0~100°
- Pressure on the end of the needle: 550mN~4300mN(56~438.5g)

NEWJIELI

FRUIT HARDNESS TESTER

Product Overview

Fruit hardness tester series is used to measure the hardness of various fruits such as apples, pears, watermelons, bananas, etc., to determine the maturity of fruits, and to reasonably grasp the cultivation of good seeds, picking time, processing time, harvest storage, export transportation, etc. It is suitable for fruit tree scientific research departments, fruit tree farms, fruit companies, colleges and universities, etc. The instrument is small in size, light in weight, intuitive in numerical display, easy to carry, and is suitable for the inspection of fruits in various fruit places. It can also be assembled on a special machine for use, which can improve the accuracy of testing, and is suitable for professional testing departments.



Product Specification

Model	NSY–1	NSY–2	NSY–3	
Scale indication	2~ 15kg/cm^2(x10^{5}pa)	0.5~ 4kg/cm^2(x10^5 pa)	0.5~ 12kg/cm^2	0.5~ 24kg/cm^2
Probe size	Φ3.5mm	Φ3.5mm	Φ11mm	Φ8mm
Precision	±0.1	±0.02	±0.1	
Indenter pressing depth	10mm			
Dimensions	140x 60 X 30mm			
Weight	0.3kg			

NSSY DIGITAL F RUIT HARDNESS TESTER

Product Overview

Fruit hardness tester series is used to measure the hardness of various fruits such as apples, pears, watermelons, bananas, etc., to determine the maturity of fruits, and to reasonably grasp the cultivation of good seeds, picking time, processing time, harvest storage, export transportation, etc. It is suitable for fruit tree scientific research departments, fruit tree farms, fruit companies, colleges and universities, etc. The instrument is small in size, light in weight, intuitive in numerical display, easy to carry, and is suitable for the inspection of fruits in various fruit places. It can also be assembled on a special machine for use, which can improve the accuracy of testing, and is suitable for professional testing departments.

Product Specification

Model	NSSY-15	NSSY-30
Scale indication	0.2~15kg/cm^2(x10^{5}Pa)	0.4~30kg/cm^2(x10^{5}Pa)
Probe size	Φ11.1mm	Φ7.9mm
Precision	±1%	
Indenter pressing depth	10mm	
Load division value	0.01Kgf/cm²	
Power	3.7V lithium battery	
Continuous usage time of battery	About 10 hours	
Charging time	4~6 hours	
Battery life	2300 times	
Charger	Input: AC 220V 50/60HZ Output: DC 5V 100mA	
Stability	Temperature Drift: 0.2uV/°C (0-60°C) Zero Drift: ≤ 0.1%/8 hours /FS	
Working temperature	5°C~35°C	
Transportation temperature	0°C~60°C	
Relative humidity	15%~80%RH	
Working environment	No seismic sources or corrosive media in the surrounding area	
Weight	About 260g	
Dimensions	160mm×71mm×35mm	



NEWJIELI

DIGITAL GRAIN HARDNESS TESTER

Product Overview

The NSGY digital display grain hardness tester is applicable to scientific research and teaching in the agricultural industry. It is specifically designed for testing the hardness of grains such as wheat and rice. It employs advanced force measurement technology, featuring high testing accuracy, direct instrument indication, high resolution, easy operation, durability, and reliability. Additionally, it has an aesthetically pleasing design and can be used handheld at the collection site or for testing on a laboratory workbench.



Features

- Digital display, easy to read, high precision.
- Light weight, small size, easy to carry.
- Unit: Kg and N switch to each other.
- The battery has short circuit, leakage and overload protection.
- The battery has a low power warning, using 3.7V lithium battery power supply, while 10 minutes no operation will automatically shut down.
- There are two measurement modes: Real–time, peak free switching.

Product Specification

Model	NSGY-1
Type specification	20kg
Maximum load value	20Kg (196N)
Load division value	0.01kg (0.1N)
Sensor structure	Built-in
Precision	±2%
Battery	3.7V lithium battery
Power charging time	4~6 hours
Continuous usage time of battery	About 15 hours
Battery life	≥300times
Charger	Input: AC220V 50HZ Output: DC 5V 1000mA
Work temperature	5℃~35℃
Transport temperature	- 10℃~ 60℃
Relative humidity	15 % ~ 80%RH
Work conditions	No seismic sources or corrosive media in the surrounding area

NEWJIELI

WEBSTER HARDNESS TESTER

Product Overview

The Webster hardness tester is a portable instrument that can quickly test the hardness of soft metals on site and complies with the Chinese non-ferrous standard YS/T420 and the American standard ASTM B647. It can be used to examine the heat treatment effect of materials to determine whether the alloy components of materials are qualified. It is also capable of testing the hardness of soft metal profiles, pipes, plates and other parts. It is especially suitable for conducting individual conformity inspections on batches of products at the production site. Its indenter can work continuously at a temperature range from 200 to 250° C, and it has multiple models for testing aluminum alloys, copper, copper alloys and mild steel.







Product Specification

- W-20: It is commonly used in the production and application of aluminum profiles with inner diameter >10mm.
- W-20A: When the thickness of the aluminum profile is >6mm, this model should be used.
- W-20B: Thin aluminum tubes with inner diameter ≤6mm should be replaced with this type.
- W-B75: Suitable for brass and copper with a hardness range of 25~110 HRE and 58~131 HV, with a measurement thickness ranging from 0.6to 6 mm and an inner diameter > 10.
- W-BB75: Suitable for electrolytic copper and soft copper alloys, with a measurement thickness ranging from 0.8 to 6 mm and an inner diamete>9.5.
- W-B92: Suitable for stainless steel 25~110HRE58~131HV, with a measurement thickness ranging from measuring 0.6 to 13mm and an inner diameter >10.

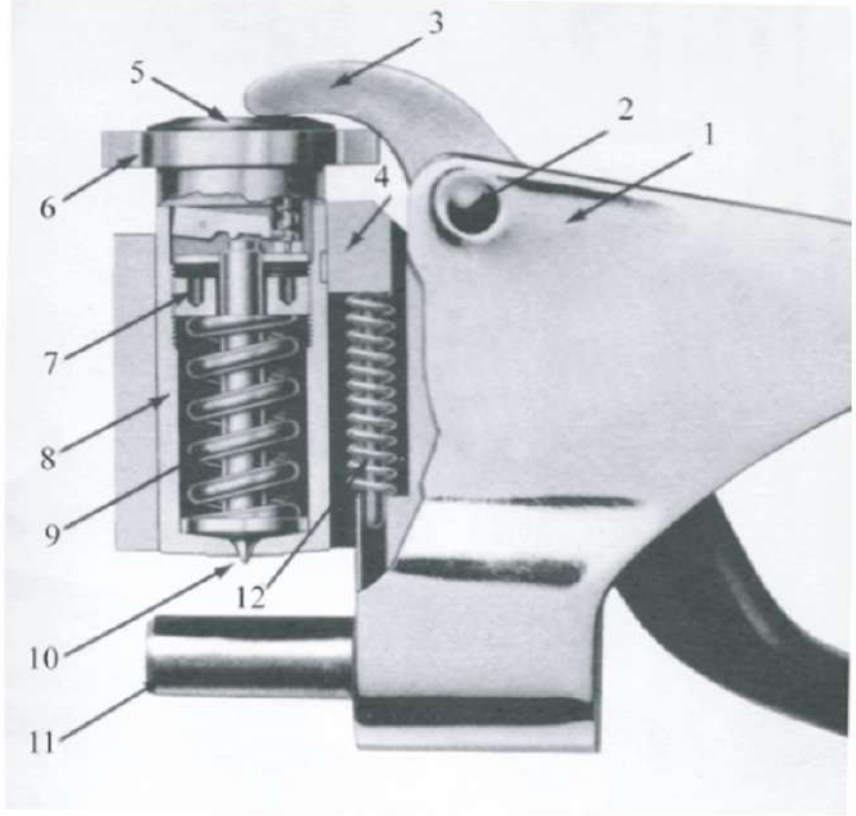







Product Structure

1. Frame 2. Support screw 3.Lower handle 4.Reset key
5. Adjusting screw 6. Header 7.Adjusting screwnut 8.Pressure pin sleeve
9. Load spring 10. Pressing needle 11. Anvil block 12. Reset spring

Technical Data

- Measurement range:0~20HW
- Indication error: 0. 5HW(5~17HW)
- Repeatability error: 0.5HW(5~ 17HW)
- Weight: 0.5kg

NEWJIELI

DIGITAL MICRO VICKERS HARDNESS TESTER

Product Overview

Micro Vickers Hardness Tester is a high-tech product combining optic, mechanic and electronic techniques. The HV-1000 microhardness tester and the HV-1000Z automatic turret microhardness tester can meet the basic Vickers hardness testing requirements, and the upgraded control system can provide more measurement data and more accurate control.



Features

- Optical System's Outstanding Features: The optical system designed by senior optical engineers not only has clear images but can also be used as a simple microscope. The brightness is adjustable, providing a comfortable visual experience and lessening fatigue during long-term operation.
- Advantages of the Industrial Display Screen: The industrial display screen can intuitively show hardness values, hardness conversions, test methods, test forces, holding times, measurement numbers, and the test process is clear and straightforward.
- Highlights of the Cast Aluminum Shell: The cast aluminum shell is formed in one piece, with a stable structure that does not deform. It has a high-grade pure white automotive paint finish, strong scratch
- resistance, and remains shiny and new after many years of use.

Application Range

- Steel, non-ferrous metals, metal boxes, hard alloys, metal sheets, microstructure
- Carburizing, nitriding and decarburization layers, surface hardening layers, electroplating layers, coatings
- Glass, wafers, ceramic materials

Product Specification

Parameter name	Parameter data
Microhardness scale	HV0.01, HV0.025, HV0.05, HV0.1, HV0.2, HV0.3, HV0.5, HV1
Display	Hold time (seconds), hardness value
Test force (gf)	10, 25, 50, 100, 200, 300, 500,1000
Load control	Automatic (load/hold/unload)
Dwell time of the test force (s)	5~60
Test force selection	External force selection knob, test force automatically displayed on the LCD screen
Objective magnification	10x, 40X
Optical channel	Dual optical channel (eyepiece and CCD camera channel)
Optical system	1. Automatic digital encoder; 2. Total amplification (μm): 100×(Observation), 400×(Measurement); 3. Measuring range (μm): 200; 4. Resolution Rate (μm): 0.01
Hardness measuring range	(5-3000)HV
X-Y test table	Size (mm): 100×100; travel (mm): 25×25, resolution (mm): 0.01
Max Height of Specimen (mm)	85
Max width of specimen (mm)	120 (Distance from center line of indenter to machine wall)
Data output	Reserved built-in micro printer interface (RS232 serial interface), optional installation
Power supply	AC220V/50HZ
Weight (kg)	35

NEWJIELI

DIGITAL MICRO VICKERS HARDNESS TESTER

Product Overview

NHVS-1000 and NHVS-1000Z type automatic turret digital micro vickers hardness tester is a high-tech product of optical and mechanical integration. The instrument is novel and beautiful, and it has good reliability, operability and intuitiveness. It is an upgraded product for micro vickers hardness testers. The machine adopts computer software control, a high-resolution optical measurement system, photoelectric sensors and other technologies to realize the automatic switching between the measuring device and the indenter. Through software input, the intensity of the light source can be automatically adjusted, and the Vickers and Knoop test methods, retention time, file number and storage can be selected. It provides a variety of hardness value conversion tables for reference. On the large LCD screen, it can display the test method, test force, measured indentation length, hardness value, test force holding time, measurement times, and the year, month, date can be input, as well as test results and data processing. The results can be output through the printer.



Application Range

- Steel, non-ferrous metals, metal boxes, hard alloys, metal sheets, microstructure
- Carburizing, nitriding and decarburization layers, surface hardening layers, electroplating layers, coatings
- Glass, wafers, ceramic materials

Specification Selection

- NHVS-1000A: small screen
- NHVS-1000B: large screen
- NHVS-1000ZA: automatic turret Small screen
- NHVS-1000ZB: automatic turret large screen

Product Specification

Parameter name	Parameter data
Microhardness scale	HV0.01, HV0.025, HV0.05, HV0.1, HV0.2, HV0.3, HV0.5, HV1
Display	Automatic reading, menu displays 5-digit hardness value, 4-digit diagonal length (D1,D2), test force, hold time, number of tests, mean standard deviation, return
Test force (gf)	10, 25, 50, 100, 200, 300, 500,1000
Load control	Automatic (load/hold/unload)
Dwell time of the test force (s)	5~ 60
Test force selection	External force selection knob, test force automatically displayed on the LCD screen
Objective magnification	10x, 40x
Optical channel	Dual optical channel (eyepiece and CCD camera channel)
Measuring eyepiece	Automatic digital encoder
Total amplification (μm)	100×(Observation), 400×(Measurement)
Measuring range (μm)	200
Resolution rate (μm)	0.01
Hardness measuring range	(5- 3000)HV
X-Y test table	Size (mm): 100×100; travel (mm): 25×25, resolution (mm): 0.01
Max height of specimen (mm)	85
Max width of specimen (mm)	120 (Distance from center line of indenter to machine wall)
Data output	Reserved built-in micro printer interface (RS232 serial interface), optional installation
Power supply	AC220V/50HZ
Dimensions (mm)	490x330x515
Weight (kg)	38

NEWJIELI

TOUCH SCREEN MICRO VICKERS HARDNESS TESTER

Product Overview

The digital micro Vickers hardness tester is a new generation of multi-functional touchscreen microhardness tester newly developed by our company. The hardness tester is novel in shape and has good reliability, operability and repeatability. It is an ideal product for testing microhardness. The machine adopts C language programming, high-rate optical measurement system and optical dual-channel structure, new technologies such as photoelectric and photocouple sensing, in addition to meeting the basic Vickers hardness test requirements, the upgraded digital display micrometer eyepiece can directly read the measurement length, so as to obtain the measurement value more quickly and accurately. The upgraded control operating system adopts a 7-inch LCD touch display screen, which can provide more measurement data and more comprehensive control.



Application Range

- Steel, non-ferrous metals, metal boxes, hard alloys, metal sheets, microstructure
- Carburizing, nitriding and decarburization layers, surface hardening layers, electroplating layers, coatings
- Glass, wafers

Specification Selection

- NHVC-1000: Manual turret
- NHVC-1000Z: Automatic turret
- NHVT-1000: Manual turret
- NHVT-1000Z: Automatic turret

Product Specification

Parameter name	Parameter name
Microhardness scale	HV0.01, HV0.025, HV0.05, HV0.1, HV0.2, HV0.3, HV0.5, HV1
Test force (gf)	10, 25, 50, 100, 200, 300, 500, 1000 (The test force unit can be converted to N)
Hardness measurement range	5-3000HV
Display	7 inch LCD touch screen
Unit conversion	Brinell, Rockwell, Knoop (the main interface can display 4 conversion rulers at the same time, and can be switched: ASTM/ISO/JJG standards)
Conformity assessment	The qualified range can be set, and the machine automatically reminds whether it is qualified
Language switch	Chinese and English systems switch at any time
Load control	Auto-load, Auto-hold, Auto-unload
Error correction	The hardness value can be corrected separately for each test force
Scale conversion	HK (Knoop's)
Dwell time of the test force (s)	5~60
Test force selection	External force selection knob, the test force is automatically displayed on the LCD touch screen
Objective magnification	10×, 40×
Optical channel	Dual optical channel (eyepiece and CCD camera channel)
Screen/turret	Manual turret NHVC and automatic turret NHVT are optional
Diagonal length input optical system resolution	Manual NHVC:0.25μm Automatic NHVT:0.0625μm
Optical system(Dual optical channels without switching)	1. Automatic digital encoder; 2. Total amplification (μm): 100×(Observation), 400×(Measurement); 3. Measuring range (μm): 200
X-Y test table	Size (mm): 100×100; travel (mm): 25×25, resolution (mm): 0.01
Max height of specimen (mm)	110
Max width of specimen (mm)	85
Power supply	AC220V/50HZ
Weight (kg)	40
Dimensions (mm)	(540*200*530)mm

NEWJIELI

ELECTRONIC BRINELL HARDNESS TESTER

Product Overview

The electronic Brinell hardness tester adopts closed-loop sensor loading, electronic control system, and has 10-level test force. This machine has the characteristics of high precision, high repeatability and stability, and easy operation.



Features

The test process is automated, and there is no human operation error. Accuracy conforms to GB/T231.2.

Application Range

Determination of Brinell hardness of ferrous metals, non-ferrous metals and bearing gold materials; Wide range of applications, especially suitable for parallel plane precision measurement.

Product Specification

Model	NHBE- 3000A
Brinell scale	HBW2.5/62.5 HBW2. 5/187.5 HBW5/125 HBW5/750 HBW 10/100 HBW10/1500 HBW 10/3000 HBW10/250 HBW10/500 HBW 10/1000
Test force	62.5kgf(612.9N), 100kgf(980.7N), 125kgf(1226N), 187.5kgf(1839N), 250kgf(2452N), 500kgf(4903N), 750kgf(7355N), 1000kgf(8907N), 1500kgf(14710N), 3000kgf(29420N)
Max height of specimen	230mm
Minimum measurement unit	0.005mm
Loading-holding time	0~60s
Hardness testing range	8~ 650HBW
Total magnification	20X
Implementation standard	EN, ISO 6507, EN ISO 6506, ASTME- -384, ASTM E-10- -08, ASTM E-384, GB/T231.2, JJG150
The distance from the indenter to the exterior	160mm
Hardness reading	Look up in a table
Power supply	Ac220+ 5%, 50~60Hz
Dimensions (mm)	550*2 10*750mm
Main engine weight	About 90kg

NEWJIELI

DIGITAL ROCKWELL HARDNESS TESTER

Product Overview

The NHRS-150 digital Rockwell hardness tester has a novel appearance and a menu-based interface. The measuring device adopts a light shed sensor and computer control. The hardness indication value is directly displayed on the LCD screen. It is an electromechanical hardness testing instrument. The machine can automatically convert various hardness parameters to each other, identify the minimum thickness parameters of the specimen and automatically convert them to each other, identify the minimum thickness of the specimen and measure the ambient temperature of the test. Built-in printer to read relevant test results. Automatic operation is realized to eliminate human operation and reading errors. The hardness tester is suitable for hardness determination of ferrous metals, non-ferrous metals and non-metallic materials.



Product Specification

Model	NHRS-150
Initial test force	10kgf (98.07N)
Total test force	60kgf (588N) 100kgf (980N) 150kgf (1471N)
Rockwell scale	HRA, HRB, HRC, HRD, HRE, HRF, HRG, HRH, HRK
Inspection standards	GB/T230.1 GB/T230.2 National Standard JJG1 12 Verification Procedure
Loading-holding time (s)	1~60
Hardness indication value reading method	LCD
Max height of specimen (mm)	180
Distance from indenter center to machine body (mm)	1 40
Dimensions (mm)	433X241X625
Power supply	220V/50HZ
Weight (kg)	70
Hardness testing range	HRA: 20- 88; HRB: 20-100; HRC: 20-70; HRD: 40-77 HRE: 70-100; HRF: 60-100; HRG: 30-94 HRH: 80-100; HRK: 40-100; HRL: 50-115; HRM: 50-1 15; HRR: 50-115

NEWJIELI

VICKERS HARDNESS TESTER

Product Overview

The automatic turret Vickers hardness tester is a high-tech product integrating optics, mechanics and electronics. This hardness tester has a novel design and boasts excellent reliability, operability and repeatability, making it an ideal product for testing Vickers hardness. The machine adopts computer software programming and an optical measurement system. Through the input via soft keys, it allows for the selection of the measurement of Vickers and Knoop hardness, enables the adjustment of the intensity of the measurement light source, and makes it possible to choose the dwell time. On the LCD display screen, the test method and test force can be shown. By inputting the length of the indentation diagonal on the panel, the hardness value can be directly read out on the screen, which simplifies the complexity of looking up tables. It is convenient to use and has high measurement accurac.



Application Range

- Steel, non-ferrous metals, metal boxes, hard alloys, metal sheets, microstructure
- Carburizing, nitriding and decarburization layers, surface hardening layers, electroplating layers, coatings
- Glass, wafers, ceramic materials

Features

- Optical System's Outstanding Features: The optical system designed by senior optical engineers not only has clear images but can also be used as a simple microscope. The brightness is adjustable, providing a comfortable visual experience and lessening fatigue during long-term operation.
- Advantages of the Industrial Display Screen: The industrial display screen can intuitively show hardness values, hardness conversions, test methods, test forces, holding times, measurement numbers, and the test process is clear and straightforward.
- Highlights of the Cast Aluminum Shell: The cast aluminum shell is formed in one piece, with a stable structure that does not deform. It has a high-grade pure white automotive paint finish, strong scratch resistance, and remains shiny and new after many years of use.

Product Specification

Parameter name	Parameter data
Vickers hardness scale	HV0.3, HV0.5, HV1.0, HV2.0, HV3.0, HV5.0
	HV0.3, HV0.5, HV1.0, HV2.0, HV3.0, HV5.0, HV10.0
	HV1, HV3, HV5, HV10, HV20, HV30
	HV1, HV5, HV10, HV20, HV30, HV50
Test force (Kgf)	0. 3, 0.5, 1.0, 2.0, 3.0, 5.0, 10.0, 20.0, 30.0, 50.0
Screen/turret	Manual turret HV and automatic turret HVS are optional
Diagonal length input Optical system resolution	Manual HV:0.5μm Automatic HVS:0.125μm
Display	5-digit hardness value, 4-digit diagonal length (D1,D2), hold time, number of tests, average, mean standard deviation, return
Load control	Automatic (load/hold/unload)
Dwell time of the test force (s)	5~60
Optical system	1. Objective lens: 10× 20×, eyepiece: 10 x; 2. Total amplification (μm): 100×(Observation), 200×(Measurement); 3. Measuring range (μm): 200
Optical channel	Dual optical channel (eyepiece and CCD camera channel)
Hardness measuring range	(5-3000)HV
Unit conversion	Brinell, Rockwell, Knoop
Scale conversion	HK (Knoop)
X-Y test table	Size (mm): 100×100; travel (mm): 25×25, resolution (mm): 0.01
Max height of specimen (mm)	165
Max width of specimen (mm)	130 (Distance from center line of indenter to machine wall)
Data output	Reserved built-in micro printer interface (RS232 serial interface), optional installation
Power supply	AC220V/50HZ
Dimensions (mm)	585mm*200mm*630mm
Weight (kg)	45

NEWJIELI

METALLOGRAPHIC SPECIMEN

Product Overview

XQ-2B metallographic sample inlaying machine is for small or irregular shapes and samples that are not easy to hold by hand. Thermosetting plastics are used to inlay and form, which is also an essential pre-process for grinding and polishing. This mechanical inlay machine, the heating temperature is controlled by a digital thermometer, and various performances are stable and reliable. For safer operation, this machine is equipped with a safety cover, which is the best equipment for sample inlay.



Product Specification

Sample pressing diameter	φ22, φ30, φ45x15 mm
Heater rule	650W, 220V, 50Hz
Dimensions	340x260x430 mm
Weight	30Kg

LX-A SHORE HARDNESS TESTER

Product Overview

In the preparation of metallographic samples, the grinding of the sample is an essential process. The grinding of the sample is generally divided into two processes: rough grinding and fine grinding. The purpose of rough grinding is to obtain a flat surface, which is generally completed on a grinding wheel, and there are still deep marks on the surface of the sample. The purpose of fine grinding is to eliminate these abrasion marks to obtain a flat and smooth grinding surface, which is ready for the next polishing. The M-1 metallographic sample grinding and polishing machine can be used for the fine grinding of metallographic samples. The shell is made of integral blister, with a novel appearance. It has the characteristics of smooth rotation, low noise, convenient operation and high work efficiency. It also has its own cooling device, which can cool the sample during grinding to prevent the metallographic structure from being damaged due to overheating of the sample. It is suitable for metallographic laboratories in factories, colleges and universities, and scientific research units, and is an excellent equipment for pre-grinding metallographic samples.

Product Specification

Disk diameter	φ22, φ30, φ45x15 mm
Rotating speed of working disc	450r/min
Input voltage	Single-phase 220v 50Hz
Dimensions	730×420×320 mm
Input power	370W
Weight	31Kg



NEWJIELI

HARDNESS TEST STAND

Product Overview

NLX-AC, NLX-D type test stand is a new generation of Shore hardness test stand developed by our company. It uses high-quality black marble as the base and high-strength exquisite tempered glass as the test platform, which makes the test more stable and more accurate. Reasonable structure and beautiful style.

NLX-AC type is suitable for the pointer LX-A, LX-C produced by our company; digital LXD-A, LXD-C hardness tester, NLX-D is suitable for the pointer LX-D produced by our company; digital LXD-D hardness tester.



Shore NLX-AC



Shore NLX-D



Fruit NSY-J



Digital Fruit NSSY-J

ROUGHNESS MEASURING PLATFORM

Product Overview

- The screw rod is lifted, and the platform is equipped with a V-shaped groove to measure the workpiece with a small shape to improve the measurement accuracy.
- Vertical lifting height :300 ± 1 mm
- Lifting and lowering return error: ≤1/6 turn of the handwheel rotation.
- Cast iron platform size :330X180X12mm
- Cast iron platform flatness :0 level
- Marble platform size :400X250X60mm
- Marble platform flatness :00 level (platform tolerance value μm)





NEWJIELI

Focused on providing high-quality measurement tools and instruments

Automatic series

- HIGH QUALITY
- COMPETITIVE PRICE
- ONE-STOP SERVICE
- OEM&ODM PROVIDED



PEN TYPE DISPLACEMENT SENSOR (AIR PUSH TYPE)HARDNESS TESTER

Product Overview

This high-precision sensor is primarily used for rapid measurement of small dimensional changes, such as length, inner diameter, outer diameter, parallelism, perpendicularity, eccentricity, and ovality caused by expansion, displacement, vibration, and pressure. It is applied in aerospace, medical devices, machinery, construction, textiles, and online detection of automotive components, as well as various industrial automation testing fields. Featuring an extremely low measuring force, it is suitable for direct measurement of delicate parts, such as automotive windshields, television CRTs, medical bottles, electrical components, and plastic parts.



NBW-10Q

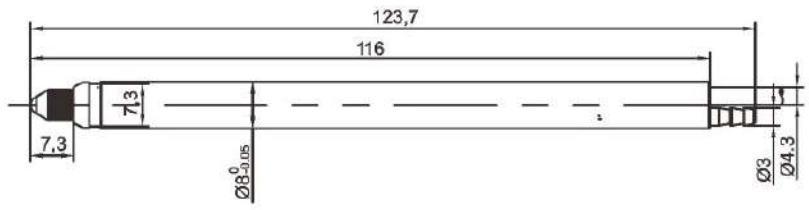

Features

- Reduce costs and make light-touch contact with the measured surface to minimize damage.
- Compact size, high precision, with air pressure adjustment for more stable travel.
- Easily replaceable probe, capable of direct contact with the workpiece surface.
- Simple installation, strong adaptability to various environments, and can replace imported sensors.

Product Specification

Range	10mm	Standard probe	Minimum Contact: 1.5mm
Coil type	Full Bridge / Half Bridge	Guiding device	Ball Bearing
Excitation frequency(khz)	13	Fatigue measurement	15 Million
Drive method	Pneumatic Push Rod	Operating temperature	-10°C to 65°C
Repeatability accuracy (μm)	≤ 0.4	Standard protective sleeve	Fluoroelastomer
Linear error	≤ 50(0.5%)	Temperature drift coefficient (%f.s./°C)	≤0.01
Measurement force (newton+30%)	≤0.25N	Resolution (μm)	0.1
Protection level	IP53/IP50	Cable length(customizable)	2M
Outer diameter	φ8	Wire exit method	Straight Exit
Sensor probe	Tungsten Carbide (Nylon Probe)	Standard connector	Longbow
Cable outer flame-retardant Braided mesh protection	√	Housing material	Stainless Steel

PEN TYPE DISPLACEMENT SENSOR (REBOUND TYPE)

Product Overview

A high-precision sensor designed primarily for rapid measurement of small dimensional changes, such as length, inner diameter, outer diameter, parallelism, perpendicularity, eccentricity, and ovality caused by displacement, vibration, or pressure.Application examples include glass production inspection, online detection of automotive parts, flatness inspection of mobile phone casings, valve position and control detection, and various other industrial automation testing scenarios.



NBWH-1

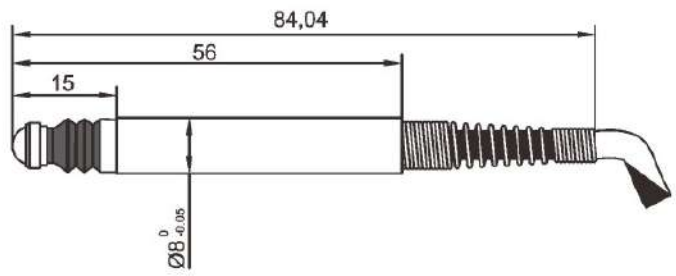

Features

- Compact size, high precision, and long mechanical lifespan.
- Tungsten carbide probe for direct contact with workpiece surfaces.
- Flame-retardant braided mesh sleeve for enhanced safety.。
- Easy installation with strong environmental adaptability, making it a viable alternative to imported sensors.

Product Specification

Measurement range	1mm (±0.5)	Standard probe	Minimum peak contact:1.5mm
Coil type	Full Bridge / Half Bridge	Guiding device	Ball bearing
Excitation frequency(khz)	13	Fatigue testing	15 million
Drive method	Rebound Type	Operating temperature	-10°C to 65°C
Repeatability accuracy(μm)	≤ 0.15	Standard protectivesleeve	Fluoroelastomer
Linear error	≤ 3(0.3%)	Temperature drift coefficient(%f.s./℃)	≤ 0.01
Measurement force (newton +30%)	1N	Resolution (μm)	0.1
Protection level	IP65	Cable length (customizable)	2m
Outer diameter	φ8	Wire exit method	Straight exit
Sensor probe	Tungsten Carbide	Standard connector	Longbow
Cable outer flameretardant braided mesh protection	√	Housing material	Stainless steel

PEN TYPE DISPLACEMENT SENSOR (REBOUND TYPE)

Product Overview

A high-precision sensor designed for rapid measurement of small dimensional changes, such as length, inner diameter, outer diameter, parallelism, perpendicularity, eccentricity, and ovality caused by displacement, vibration, or pressure.Application examples include glass production inspection, online detection of automotive parts, flatness inspection of mobile phone casings, valve position and control detection, and various other industrial automation testing scenarios.



NBWH-2

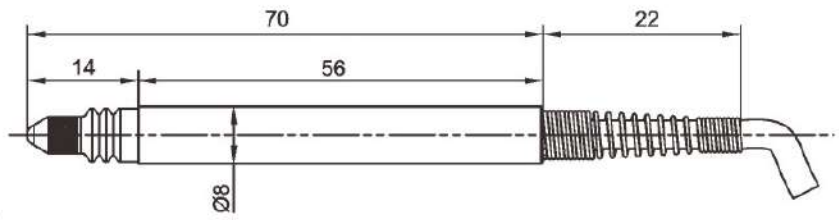

Features

- Compact size, high precision, and long mechanical lifespan.Tungsten carbide probe for direct contact with workpiece surfaces.
- Flame-retardant braided mesh sleeve for enhanced safety.
- Easy to install, highly adaptable to various environments, and capable of replacing imported sensors.

Product Specification

Measurement range	2mm (±1)	Standard probe	Minimum peak contact:1.5mm
Coil type	Full Bridge / Half Bridge	Guiding device	Ball bearing
Excitation frequency(khz)	10	Fatigue testing	15 million
Drive method	Rebound Type	Operating temperature	-10℃ to 65℃
Repeatability accuracy(μm)	≤ 0.15	Standard protectivesleeve	Fluoroelastomer
Linear error	≤ 3(0.3%)	Temperature drift coefficient(%f.s./℃)	≤ 0.01
Measurement force (newton +30%)	1N	Resolution (μm)	0.1
Protection level	IP65	Cable length (customizable)	2m
Outer diameter	φ8	Wire exit method	Straight exit
Sensor probe	Tungsten Carbide	Standard connector	Longbow
Cable outer flameretardant braided mesh protection	√	Housing material	Stainless steel

NEWJIELI

PEN TYPE DISPLACEMENT SENSOR (REBOUND TYPE)

Product Overview

A high-precision sensor designed for rapid measurement of small dimensional changes, such as length, inner diameter, outer diameter, parallelism, perpendicularity, eccentricity, and ovality caused by displacement, vibration, or pressure.Application examples include glass production inspection, online detection of automotive parts, flatness inspection of mobile phone casings, valve position and control detection, and various other industrial automation testing scenarios.



NBWH-15

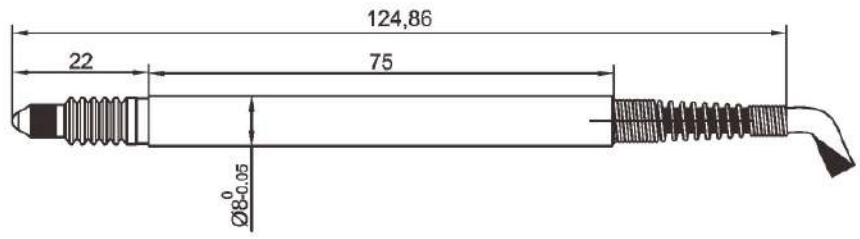



NBWH-05

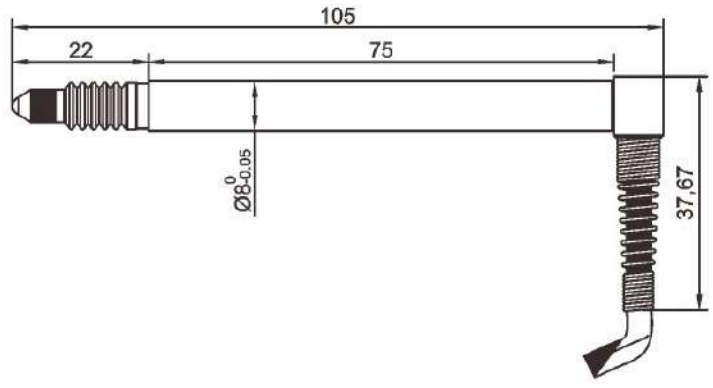

Features

- Compact size, high precision, and long mechanical lifespan.
- Tungsten carbide probe for direct contact with workpiece surfaces.
- Flame-retardant braided mesh sleeve for enhanced safety.
- Easy installation with strong environmental adaptability, making it a suitable replacement for imported sensors.

Product Specification

Measurement range	5mm(±2.5)	Standard probe	Minimum contact:1.5mm
Coil type	Full Bridge / Half Bridge	Guiding device	Ball bearing
Excitation frequency(khz)	13	Fatigue testing	15 million
Drive method	Rebound Type	Operating temperature	-10℃ to 65℃
Repeatability accuracy(μm)	≤ 0.15	Standard protectivesleeve	Fluoroelastomer
Linear error	≤ 3(0.3%)	Temperature drift coefficient(%f.s./℃)	≤ 0.01
Measurement force (newton +30%)	1N	Resolution (μm)	0.1
Protection level	IP65	Cable length (customizable)	2m
Outer diameter	φ8	Wire exit method	Straight exit
Sensor probe	Tungsten Carbide	Standard connector	Longbow
Cable outer flameretardant braided mesh protection	√	Housing material	Stainless steel

PEN TYPE DISPLACEMENT SENSOR (REBOUND TYPE)

Product Overview

A high-precision sensor designed for rapid measurement of small dimensional changes, such as length, inner diameter, outer diameter, parallelism, perpendicularity, eccentricity, and ovality caused by displacement, vibration, or pressure.Application examples include glass production inspection, online detection of automotive parts, flatness inspection of mobile phone casings, valve position and control detection, and various other industrial automation testing scenarios.



NBWH-110

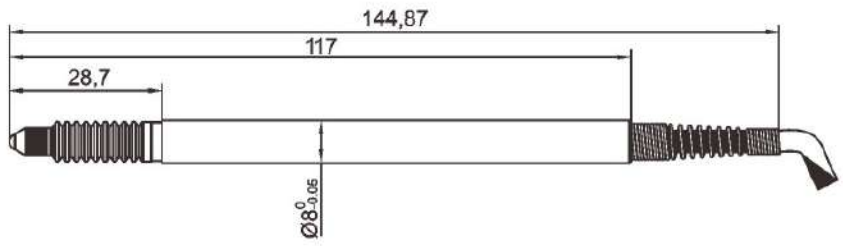



NBWH-010

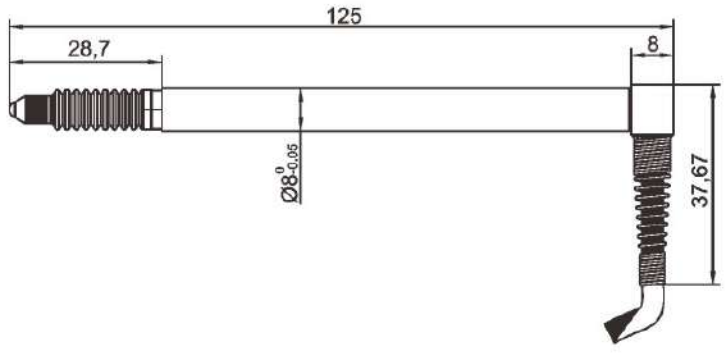

Features

- Compact size, high precision, and long mechanical lifespan.
- Tungsten carbide probe for direct contact with workpiece surfaces.
- Flame-retardant braided mesh sleeve for enhanced safety.
- Easy installation with strong environmental adaptability, making it a suitable replacement for imported sensors.

Product Specification

Measurement range	10mm(±5)	Standard probe	Minimum contact:1.5mm
Coil type	Full Bridge / Half Bridge	Guiding device	Ball bearing
Excitation frequency(khz)	13	Fatigue testing	15 million
Drive method	Rebound Type	Operating temperature	-10℃ to 65℃
Repeatability accuracy(μm)	≤ 0.15	Standard protectivesleeve	Fluoroelastomer
Linear error	≤ 0.5%	Temperature drift coefficient(%f.s./℃)	≤ 0.01
Measurement force (newton +30%)	1N	Resolution (μm)	0.1
Protection level	IP65	Cable length (customizable)	2m
Outer diameter	φ8	Wire exit method	Straight exit
Sensor probe	Tungsten Carbide	Standard connector	Longbow
Cable outer flameretardant braided mesh protection	√	Housing material	Stainless steel

NEWJIELI

LEVER TYPE DISPLACEMENT SENSOR

Product Overview

A high-precision sensor designed primarily for rapid measurement of small dimensional changes, such as length, inner diameter, outer diameter, parallelism, perpendicularity, eccentricity, and ovality caused by displacement, vibration, or pressure.Application examples include glass production inspection, online detection of automotive parts, flatness inspection of mobile phone casings, valve position and control detection, and various other industrial automation testing scenarios.



NGW-0.7

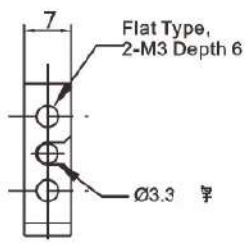

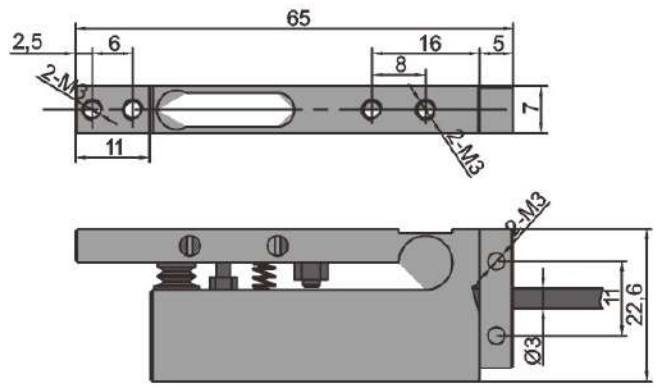

Features

- Compact size, high precision, and long mechanical lifespan.
- Tungsten carbide probe for direct contact with workpiece surfaces.
- Flame-retardant braided mesh sleeve for enhanced safety.。
- Easy installation with strong environmental adaptability, making it a viable alternative to imported sensors.

Product Specification

Measurement range	0.7mm(±0.35)	Standard probe	Minimum peak contact:1.5mm
Coil type	Half Bridge	Excitation current	1
Excitation frequency(khz)	10	Fatigue testing	15 million
Drive method	Rebound Type	Operating temperature	-10°C to 65°C
Repeatability accuracy(μm)	≤ 0.15	Standard protectivesleeve	Fluoroelastomer
Linear error	≤ 3(0.3%)	Temperature drift coefficient(%f.s./℃)	≤ 0.01
Measurement force (newton +30%)	1N	Resolution (μm)	0.1
Protection level	IP65	Cable length (customizable)	2m
Sensor probe	Tungsten Carbide	Wire exit method	Straight exit
Cable outer flameretardant braided mesh protection	√	Standard connector	Longbow

NEWJIELI

GRATING DISPLACEMENT SENSOR



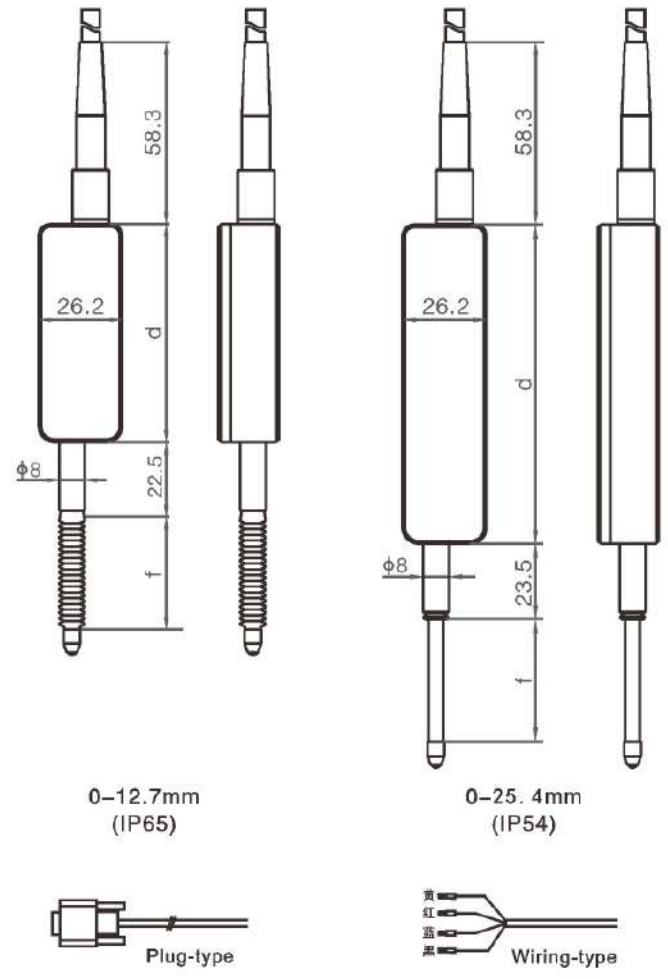

Communication Protocol

- Data Frame Format: RTU Mode
- Communication Parameters: Baud Rate 38400 bps
- Data Frame: 1 Start Bit, 8 Data Bits, No Parity, 2 Stop Bits

Features

- Operating Temperature: –10~40℃
- Humidity: ≤ 80% RH
- Absolute Measurement (Using Optical
- Grating Absolute Encoding)
  Waterproof: IP54/IP65 (Optional)

Displacement Sensor Data

Master Query Command 01 03 00 00 00 02 C40B		Displacement Sensor Response 01 03 04 01 00 12 39 37 7DH			
Address Code	01H	Address Code	01H		
Function Code	03H	Function Code	03H		
Access Register Starting Address	00H	Data Byte Length	04H		
		Data Word 1 High 8 Bits	01H	Displacement Sensor Data	Flag Bit
Data Word Length	00H	Data Word 1 Low 8 Bits	00H		
	00H	Data Word 2 High 8 Bits	12H		Measurement Data (Hexadecimal)
	02H	Data Word 2 Low 8 Bits	39H		
CRC (Low 8 Bits)	C4H	CRC (Low 8 Bits)	37H		
CRC (High 8 Bits)	0BH	CRC (High 8 Bits)	7DH		

Product Specification

Model		Range (mm)	Accuracy	Resolution	d (mm)	f (mm)	Waterproof
NGS-5332C	NGS-5332C	0–12.7	≤10μm	5μm	68.2	36	IP65
NGS-5302C	NGS-5302J		±2μm	1μm			
NGS-5312C	NGS-5312J		≤2μm	0.5μm			
NGS-5322C	NGS-5322J		≤1.4μm	0.2μm			
NGS-5332C	NGS-5332J	0–25.4	≤10μm	5μm	99.1	38	IP54
NGS-5302C	NGS-5302J		±3μm	1μm			
NGS-5312C	NGS-5312J		≤3μm	0.5μm			
NGS-5322C	NGS-5322J		≤1.8μm	0.2μm			

Port Output Description

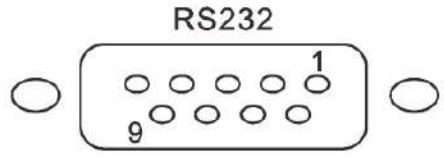

Plug Type		Wiring Type	
Pin Numbering	Function	Pin Numbering	Function
2	TXD (Data OUT)	Blue	TXD (Data OUT)
3	RXD (Data IN)	Black	RXD (Data IN)
4	5V (Power Supply)	Yellow	5V (Power Supply)
5	GND (Ground)	Red	GND (Ground)

NEWJIELI

GRATING DISPLACEMENT SENSOR (WITH DISPLAY)



0–12.7mm (IP65)

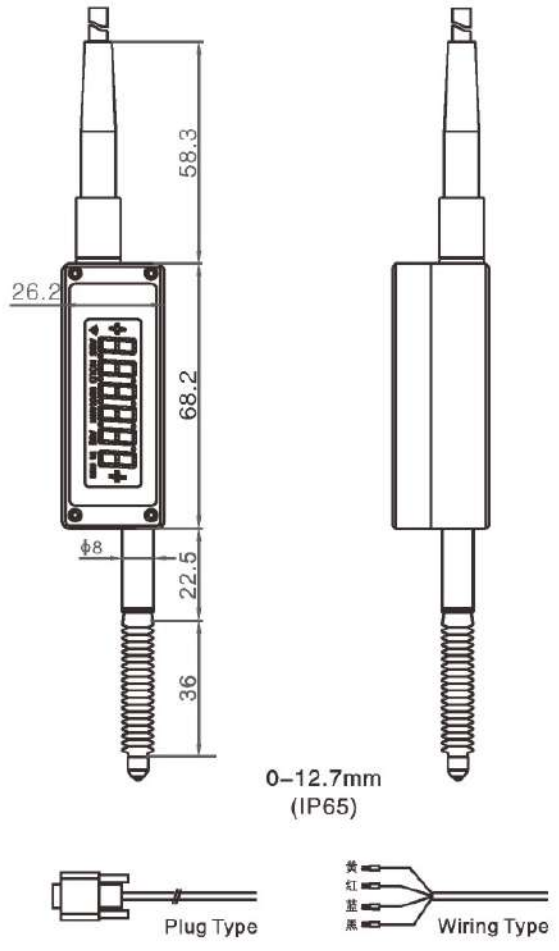

Features

- Operating Temperature: –10~40℃
- Humidity: ≤ 80% RH
- Absolute Measurement: Using optical grating absolute encoding
- Waterproof: IP65
- Protocol Support: Modbus RTU
- Data Read Protocol Support
- Zeroing Data Protocol Support
- LCD Display: Supports switching between metric and imperial units
- LCD Display: Supports data inversion
- LCD Display: Supports data hold function
- Support for Extreme Value Measurement
- Display Mode: Supports normal/extreme value display mode selection
- Preset and Limit Parameters: Supports setting preset, upper and lower limit parameters. Green backlight indicates data within the acceptable range, red backlight indicates data out of range.

Displacement Sensor Data

Master Query Command 01 03 00 00 00 02 C40B		Displacement Sensor Response 01 03 04 01 00 12 39 37 7DH			
Address Code	01H	Address Code	01H		
Function Code	03H	Function Code	03H		
Access Register Starting Address	00H	Data Byte Length	04H		
		Data Word 1 High 8 Bits	01H	Displacement Sensor Data	Flag Bit
Data Word Length	00H	Data Word 1 Low 8 Bits	00H		
	00H	Data Word 2 High 8 Bits	12H		Measurement Data (Hexadecimal)
	02H	Data Word 2 Low 8 Bits	39H		
CRC (Low 8 Bits)	C4H	CRC (Low 8 Bits)	37H		
CRC (High 8 Bits)	0BH	CRC (High 8 Bits)	7DH		

Port Output Description

RS232

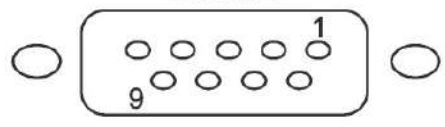

Product Specification

Model		Range (mm)	Accuracy	Resolution	Waterproof
NGSX–5332C	NGSX–5332C	0–12.7	≤10μm	5μm	IP65
NGSX–5302C	NGSX–5302J		±2μm	1μm	
NGSX–5312C	NGSX–5312J		≤2μm	0.5μm	
NGSX–5322C	NGSX–5322J		≤1.4μm	0.2μm	

Plug Type		Wiring Type	
Pin Numbering	Function	Pin Numbering	Function
2	TXD (Data OUT)	Blue	TXD (Data OUT)
3	RXD (Data IN)	Black	RXD (Data IN)
4	5V (Battery)	Yellow	5V (Battery)
5	GND (Ground)	Red	GND (Ground)

NEWJIELI

PNEUMATIC GRATING DISPLACEMENT SENSOR



0-12.7mm (IP65)

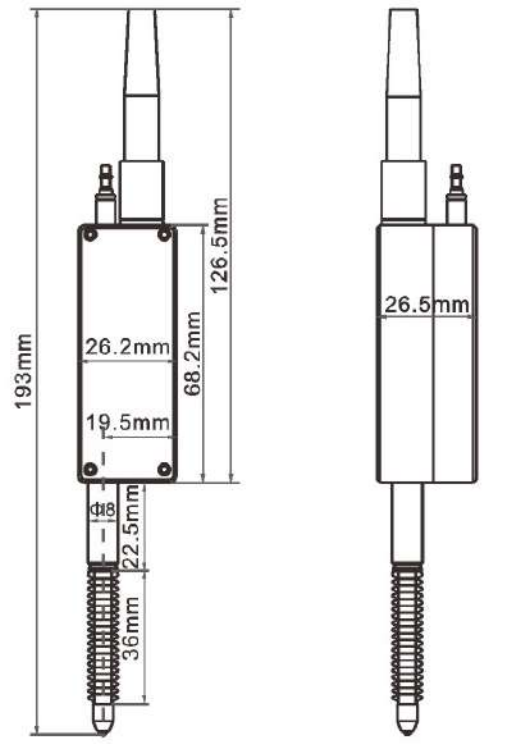

0-12.7mm (IP65)

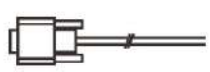

Plug Type(C)

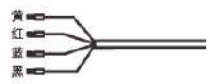

Wiring Type(J)

Communication Protocol - Modbus RTU Mode1

- Data Frame Format: RTU Mode
- Communication Parameters:Baud Rate: 38400 bps,
- Data Frame: 1 Start Bit8 ,Data Bits, No Parity,2 Stop Bit

Features

- Operating Temperature: -10~40℃
- Humidity: ⩽ 80% RH
- Measurement Type: Absolute measurement (using optical grating
- absolute encoding)
- Waterproof Rating: IP65

Displacement Sensor Data

Master Query Command 01 03 00 00 00 02 C40B		Displacement Sensor Response 01 03 04 01 00 12 39 37 7DH			
Address Code	01H	Address Code	01H		
Function Code	03H	Function Code	03H		
Access Register Starting Address	00H	Data Byte Length	04H		
		Data Word 1 High 8 Bits	01H	Displacement Sensor Data	Flag Bit
Data Word Length	00H	Data Word 1 Low 8 Bits	00H		
	00H	Data Word 2 High 8 Bits	12H		Measurement Data (Hexadecimal)
	02H	Data Word 2 Low 8 Bits	39H		
CRC (Low 8 Bits)	C4H	CRC (Low 8 Bits)	37H		
CRC (High 8 Bits)	0BH	CRC (High 8 Bits)	7DH		

Port Output Description

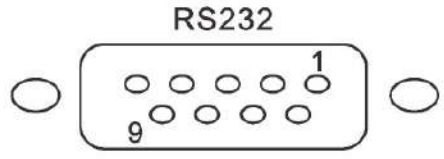

Product Specification

Model		Range (mm)	Accuracy	Resolution	Waterproof
NQD-5332C	NQD-5332C	0-12.7	⩽10μm	5μm	IP65
NQD-5302C	NQD-5302J		±2μm	1μm	
NQD-5312C	NQD-5312J		⩽2μm	0.5μm	
NQD-5322C	NQD-5322J		⩽1.4μm	0.2μm	

Plug Type		Wiring Type	
Pin Numbering	Function	Pin Numbering	Function
2	TXD (Data OUT)	Blue	TXD (Data OUT)
3	RXD (Data IN)	Black	RXD (Data IN)
4	5V (Battery)	Yellow	5V (Battery)
5	GND (Ground)	Red	GND (Ground)

NEWJIELI

SPLIT DIGITAL DIAL INDICATOR





Features

- Large LCD screen, clear and accurate reading, suitable for the measurement environment where ordinary indicator tables are inconvenient to read
- Measurements with dimensional measurements, geometric tolerance detection, such as runout, flatness, perpendicularity, etc
- The display is separate from the probe; The length of the connecting cable is 1.2 meters for the rear cable outlet and 30 cm for the front cable outlet
- Battery: 3V CR 2032 environmental lithium battery
- Low voltage alarm function
- When the LCD screen displays small characters "5" and "in", it is an imperial display
- The zero key can be cleared at any position within the measurement range
- Buttons: on/off, zero, mm/inch conversion
- Repeat the mm/in key to directly convert the metric to the imperial value
- Ambient temperature: ≤80%
- Operating temperature:0℃ ~40℃
- Storage temperature:-10℃~60℃
- Outlet mode: rear outlet or front outlet
- Force value: ≤2.2N

Dimensions Drawings

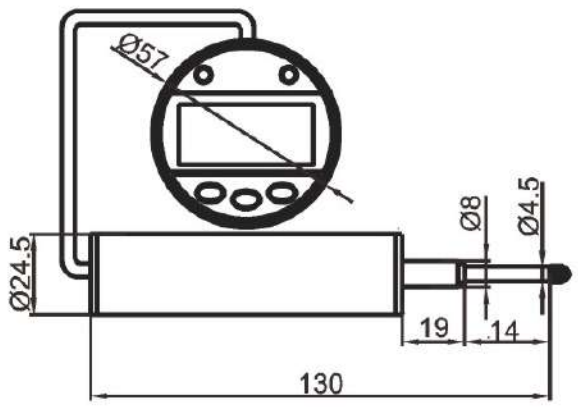

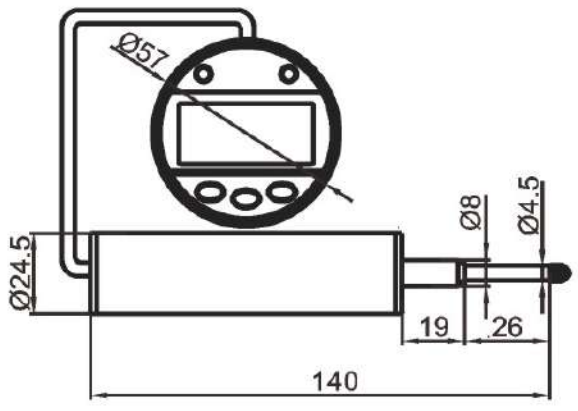

Technical Data

Model	Measurement	Division value	Accuracy
NFB-10	0-10mm	0.01mm	±0.03mm
NFB-25	0-25mm	0.01mm	±0.03mm

NEWJIELI

VERTICAL DIGITAL DIAL INDICATOR





Features

- Large LCD screen, clear and accurate reading, suitable for the measurement environment where ordinary indicator tables are inconvenient to read
- Measurements with dimensional measurements, geometric tolerance detection, such as runout, flatness, perpendicularity, etc
- Battery: 3V CR 2032 environmental lithium battery
- Low voltage alarm function
- When the LCD screen displays small characters "5" and "in", it is an imperial display
- The zero key can be cleared at any position within the measurement range
- Buttons: on/off, zero, mm/inch conversion
- Repeat the mm/in key to directly convert the metric to the imperial value
- Ambient temperature: ≤80%
- Operating temperature: 0℃ ~40℃
- Storage temperature: –10℃~60℃
- Force value: ≤2.2N

Dimensions Drawings

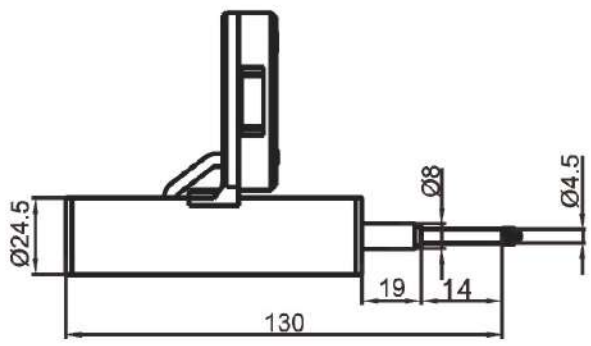

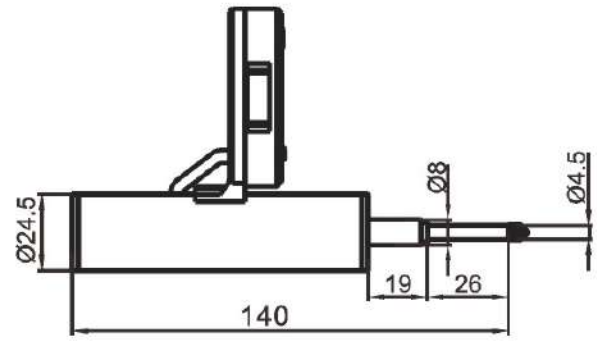

Technical Data

Model	Measurement	Division value	Accuracy
NCB-10	0-10mm	0.01mm	±0.03mm
NCB-25	0-25mm	0.01mm	±0.03mm

NEWJIELI

ANALOG (DIGITAL) DATA COLLECTOR



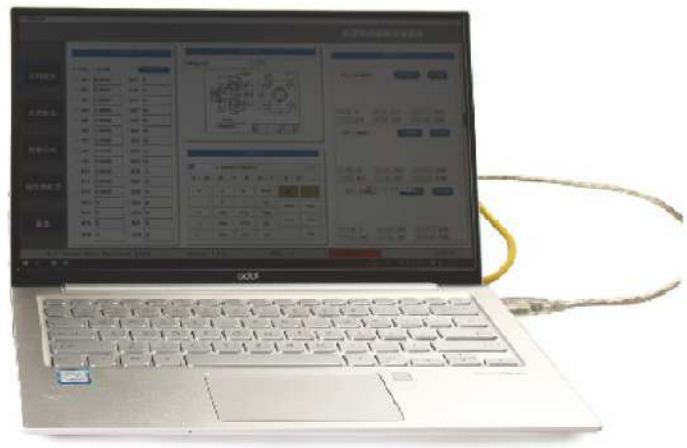

Product Overview

Connected through the sensor connector, it acquires sensor identification data, performs analog-to-digital conversion, and implements linearization functions. It then exchanges information effectively with the computer via a bus, providing data for measurement processing.

Features

- Compact size, easy wire exit, and simple installation.
- Single-channel, dual-channel, and multi-channel options available (customizable).
- Voltage analog/digital output of measurement results, connectable to computers and PLCs.

Product Specification

Product Model	Single/Double and Multi-channel Analog /Digital Data Acquisition HDB	Output Method	Analog/Digital Output
Sensor Type	Full Bridge/Half Bradge	Output Interface	RS232, RS485, USB, Ethernet
Number of Input Channels	1-64channels(can be customized)	Measurement Data Output	AD Sampling Frequency
Measurement Range	500μm-10mm	Compatible Brands	TESA, FURGER, PITT, MAUBOSS
Accuracy	0.2-0.6μm	Operating Temperature	0-60℃
Voltage	220V	Chip	Imported
Resolution	0.1μm	Communication Protocol	Modlbus

Technical Data

- Input port : DB9 port, RS232 signal
- Output port : DB9 port, RS232/RS485 signal
- Function: Collect displacement data of micrometer
- Power supply:12VAC-DC Adapter
- Features: the number of channels can be combined freely, and 60 channel capacitive grating micrometers or 24 channel grating displacement sensors can be connected



Assembling the main hub
NPJ-10Z

Data communication parameters

- Data output format: MODBUS standard protocol, RTU mode
- Data transmission mode: full duplex transmission
- Default device address: 80H
- Default data start bit: 1 bit
- Default data length: 8 digits
- Default data stop bit: 2 digits
- Default parity bit: None
- Default baud rate:38400bps



Assembling the sub-hub
NPJ-10F

Assembly effect



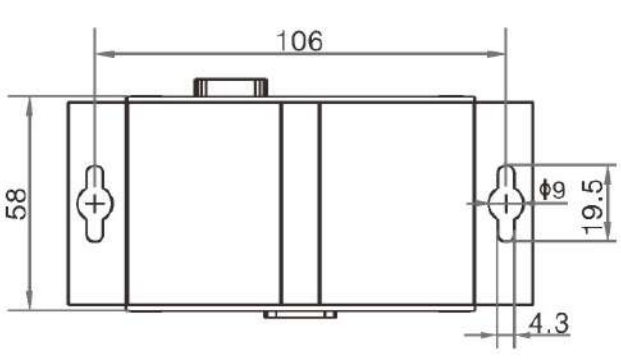

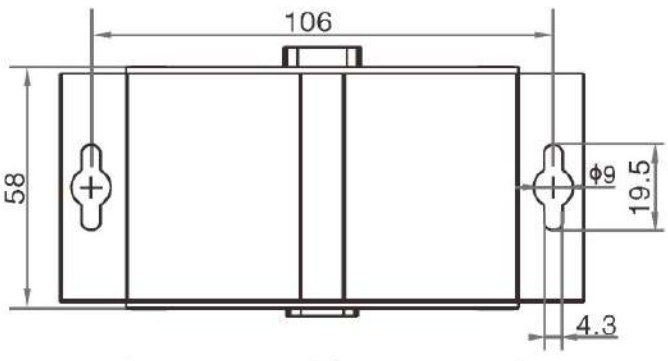

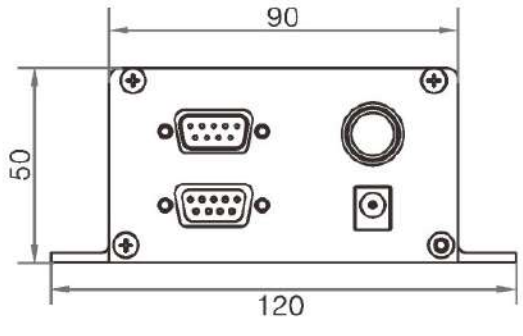

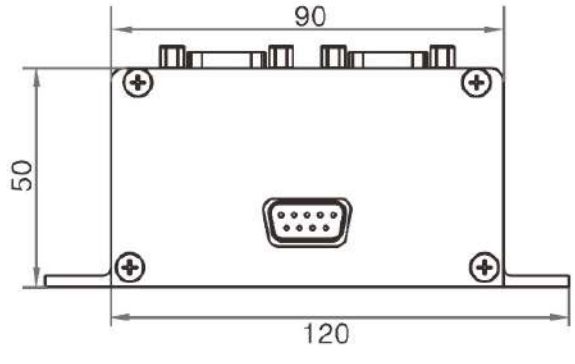

NEWJIELI

ROUNDNESS QUICK TESTER

Product Overview

Roundness measuring instruments are widely used in industries such as the bearing industry, mechanical processing, electric motors, auto parts, motorcycle parts, precision hardware, precision tools, cutting tools, molds, optical components and so on. They are applicable to the roundness measurement of various annular workpieces in scientific research institutes, measurement institutions of colleges and universities, enterprise measurement rooms, workshops and other places. Moreover, they can provide the eccentricity and phase of parts.

Product Specification

- Small and compact, space-efficient, and rapid in detection: workpiece adjustment is quick and easy, ensuring high detection efficiency.
- Similar workpieces can be measured instantly upon placement.
- Visual management: directly set the tolerance range of the measured workpiece. Green indicates pass, red for fail, making it instantly recognizable.
- Intelligent detection: data statistics SCP and CPK analysis, with
- automatic data table generation and printer connectivity.
- Precise measurement: high-precision acquisition system, self-developed software, and modular design minimize maintenance cost.
- Flexible adjustment for a wider measurement range: hand-crank for vertical (Z-axis) adjustment. Built-in slides in the marble platform enable free radial (X-axis) movement for larger diameter measurement.
- Suitable for workshop and laboratory use: no need for a constant temperature environment. Workshop temperature and humidity won't affect accuracy. Waterproof grooves in the main housing prevent water and oil leakage.
- Internet of Things system configuration is reserved (not standard): data can be uploaded to the cloud for real-time background management and control.



Technical Data

Model		NRA-240
Measurement method		Manual operation
Measurement range	Maximum measured diameter	Φ240MM
	Left and right movement range (X-axis)	155MM
	Up and down range (Z-axis)	135MM
	Maximum loading diameter	Φ450MM
	Maximum measured height	200MM
Rotational accuracy	Diameter runout	(0.04+6H/10000)μm H: Measurement height (mm)
	Axial runout	(0.04+6R/10000) um R: Measuring radius (mm)
Measuring speed	Rotation direction (A)	60RPM(Adjustable)
Revolving table	Table outer diameter	Φ90MM
	Load capacity	20KG
sensor	Measuring range	1400μm
	Measuring force	70mN
	Needle shape	Φ1.6mm cemented carbide balls
	Needle length	40mm
Data processing equipment (DPE)		PC
OS		Windows
Display		13.3-inch color LCD touch screen
Interface		USB3.0,100/1000METHERNET
Measurement and analysis software		Multi-functional fast detection software for geometric accuracy
Type of filter	Digital filter	Gauss
Roundness evaluation of shape error		LSC
Measurement item		Roundness, eccentricity, frequency spectrum, wave height, runout
Machine weight		55KG

NEWJIELI

CONCENTRICITY TESTER

Product Overview

It is suitable for measurement of the rotational symmetric workpiece, such as step shaft, shaft sleeve, bushing block, etc.

Product Specification

- Precision measurement for the circularity, concentricity, circular runout of shaft workpiece
- Precision measurement quickly for outer circle and inner circle of shaft workpiece simultaneously
- Precision measurement for muti-points in one shaft workpiece simultaneously
- Quick measuring for flush surface, inner circle and outer circle at the same time
- The standard accuracy is 0.005mm and the high accuracy is 0.002mm
- Fast measurements save time
- Easy to operate, strong versatility
- Lightweight, easy to move and easy to maintain



Economy model A series



Economy model C series

Technical Data

Model	Indicator	Fixture type(mm)		Head accuracy (μm)	Comprehensive accuracy(μm)
		Applicable diameter	Applicable length		
NWA-10	Single indicator type	3-25	102	⩽ 1μm	⩽ 5μ m
NWA-20		10-50	152		
NWA-40		20-102	203		
NWK1-10	Double indicator type	3-25	102		
NWK1-20		10-50	152		
NWK1-40		20-102	203		
NWK2-20	Scale/ level type	10-50	152		
NWK2-40		20-102	203		
NWA-10G	Single indicator type	3--25	102		⩽ 2μ m
NWA-20G		10-50	152		
NWA-40G		20-102	203		
NWK1-10G	Double indicator type	3-25	102		
NWK1-20G		10-50	152		
NWK1-40G		20-102	203		
NWK2-20G	Scale/ level type	10-50	152		
NWK2-40G		20-102	203		

NEWJIELI

ELECTRIC CONCENTRICITY TESTER

Choosing A Concentricity Tester Requires Three Parts To Be Confirmed

- Standard accuracy and high precision
- Rotating working axis
- Gauge specifications and other accessories (gauge bracket, standard lever gauge bracket, side lever gauge bracket, rail end bracket, etc.)

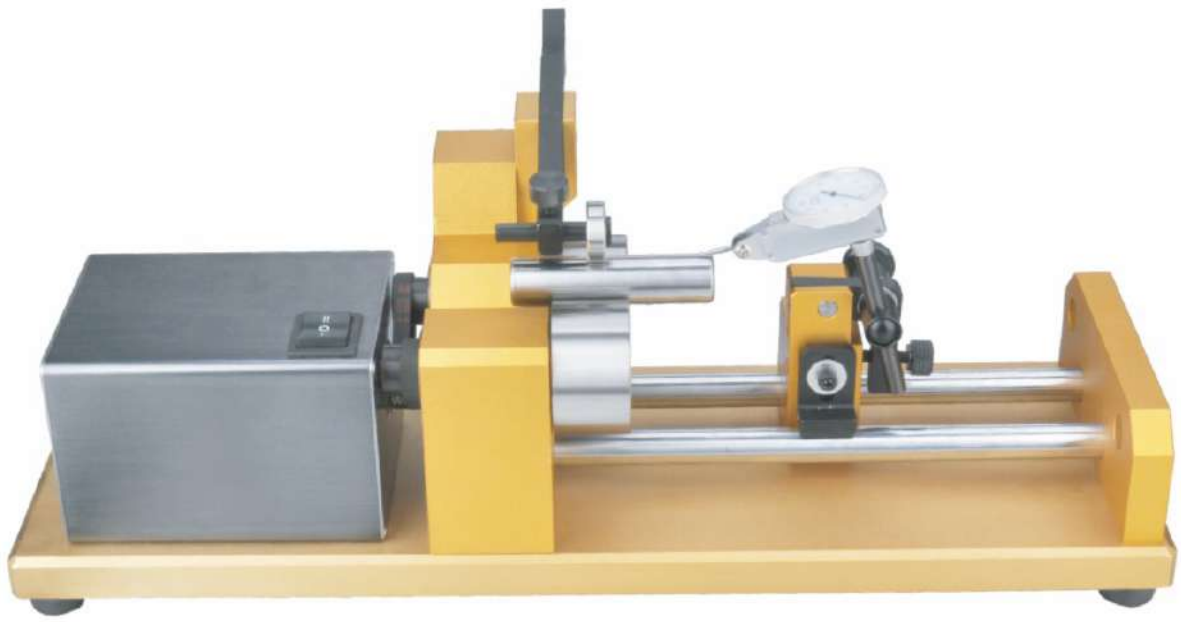

Operating Instructions

- Please place the instrument in a dry and clean environment, not directly exposed to direct sunlight or wet places, avoid high temperature and violent vibration.
- The coaxiality measuring instrument is a precision instrument, which should be handled with care during transportation and movement to avoid impact and collision.
- In order not to affect the accuracy of the instrument, the "rotating working shaft" and "guide shaft" should be wiped with a clean soft cloth or absorbent cotton dipped in pure alcohol or special cleaning agent, and avoid touching and wiping directly with hands.
- Regularly do rust prevention, cleaning and other maintenance work on the instrument to prevent acidic (corrosive) and other substances from touching the surface of the instrument.
- The instrument should be placed horizontally when used to prevent the workpiece from moving axially during the measurement.

Usage Method

- Adjust the height of the "press wheel" according to the size of the workpiece to be measured, so that the "press wheel" can press the workpiece to be measured with an appropriate pressure.
- The "pressure wheel" is raised by the "operating handle", the workpiece to be measured is placed on the "rotating work axis", and the "pressure wheel" is returned to its position.
- Adjust the height of the "watch frame" and move it so that the dial indicator probe touches the surface of the workpiece to be measured, and the dial pointer is adjusted to zero.
- Adjust the "lever gauge" probe to the appropriate position of the workpiece to be measured, so that it touches the surface of the workpiece, and adjust the dial pointer to zero.
- Rotate the handwheel to fine-tune the meter head according to the actual situation to complete the reading.

Maintenance

- All parts should be kept clean, if there is fine dust, you can blow it off with a balloon, if there is oil stains or fingerprints, use cotton yarn to gently wipe them off.
- The coaxiality measuring instrument is a precision instrument, which is forbidden to be disassembled and assembled by itself to prevent reducing the measurement accuracy of the instrument or damaging the instrument.
- When the coaxiality measuring instrument is not in use, it should be covered with a dust cover to avoid dust; Apply anti-rust oil and store in a dry place to avoid rust.
- In order to maintain the performance of the coaxiality measuring instrument, it is recommended to perform regular inspections.

Product Overview

- High precision and high stability. The highest resolution can reach 0.1um, and there is no need to warm up when the machine is turned on.
- The relative and absolute values of the detected dimensions are displayed simultaneously.
- Bright LCD screen display. It is visible from all angles and is clear and bright.
- The three-color light bar automatically converts the indication.
- Chinese menu operation. The display is rich, intuitive and easy to operate
- It can be equipped with any shape of nozzle orifice gas probe from 0.3mm to 2.0mm.
- The software can select ± 5 μ m, ± 10 μ m, ± 25 μ m, and ± 50 μ m ranges.
- Up to 800 measurement data can be stored, which can be queried without loss in case of power failure.
- Ten sets of programs can be set up to measure a variety of specifications.
- The magnification adjustment range is large, which can extend the life of the probe by more than 50%.
- Input and output: optocoupler isolation IO input and output interface.
- It has RS232 or RS485 communication function.
- Special functions can be customized, such as peak operation, group selection, data upload, U disk storage, wireless transmission, etc.
- It can be customized ± 100 μ m and ± 150 μ m large-capacity types.
- Strong and durable: the instrument has good overall sealing, and is not afraid of oil and moisture.
- Inspection data can be automatically saved and sent with a delay in time.



(Inner diameter probe)



(Outer diameter probe)



Technical Data

Indication range(μm)	±5	±10	±25	±50
Digital display resolution(μm)	0.1	0.2	0.5	1.0
Measuring error(μm)	0.2	0.4	1.0	2.0
Repeatability(um) ≤	0.1	0.2	0.5	1.0
Variability of the indication(μm) ≤	0.1	0.2	0.5	1.0
Initial clearance(μm)	25~60	30~60	40~80	40~80
Dimensions	60mm(width) × 498mm(height) × 180mm(depth)			
Weight	About 2.8kg			

NEWJIELI

Focused on providing high-quality measurement tools and instruments

Nondestructive testing series

- HIGH QUALITY
- COMPETITIVE PRICE
- ONE-STOP SERVICE
- OEM&ODM PROVIDED





WATER IMMERSION ULTRASONIC SCANNING MICROSCOPE

Product Overview

NYTS500 new small all-in-one machine, specially designed for semiconductor packaging and testing production line, has the characteristics of fast scanning speed, small size, light weight, convenient operation, etc., and the price of the whole machine is only one-third of imported products .This product is suitable for quality inspection and failure analysis instruments commonly used in the semiconductor packaging manufacturing industry.

Application

On-site sampling inspection of small and medium-sized parts, a variety of packaging manufacturing processes.Common defects have a unique effect that will be taken from analytical science by ultrasound scanning microscopy.The field is further extended to the field of process control and testing.



NYTS500

Test Items

Semiconductor wafers, packaging devices, high-power devices IGBT, Discrete Devices, SMT Chips, Sticky Chips, Chips,IC integrated electrical appliances, thyristors, etc

Test content:

1. Internal cracks in the material
2. Delamination defects
3. Cavities, bubbles, and voids
4. Internal structure detection and fault detection
5. Welding quality inspection

Product Specification

- Machine size: 800m, 600mm, 1300mm
- Sink size: 380mm, 240mm, 110mm
- Maximum scanning range: manual: 260mm,100mm,50mm; Automatic: 260mm 25mm,50mm
- Typical scanning time45s (test conditions: scanning area 10mm,10mm, resolution 50um)
- Maximum scanning speed: 300mm/s
- Recommended image resolution: 1~4000um
- Thickness detection range: selected according to the material and thickness of the customer's workpiece.
- Positioning accuracy: X/Y1 μ m, Z10 μ m
- Repeat positioning accuracy: X/Y0.01mm, Z0.02mm

Semiconductor industry welding quality inspection

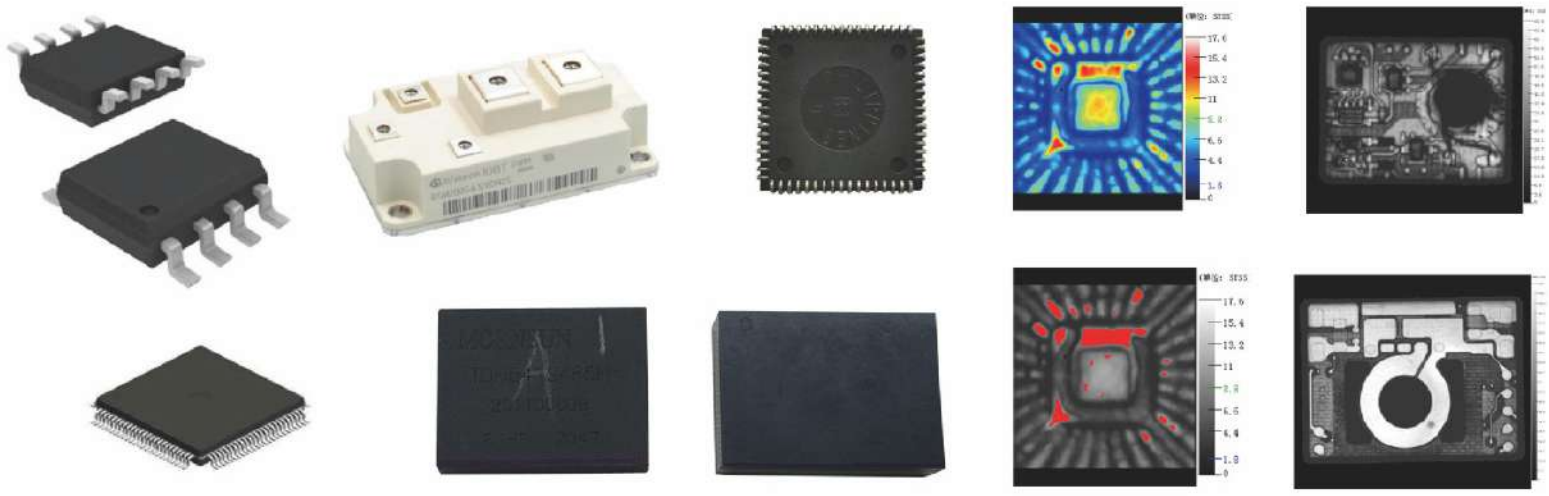

WATER IMMERSION ULTRASONIC SCANNING MICROSCOPE

Product Overview

Lightweight one-desktop type, easy to operate and maintain, low cost Compared with the S100 model, the unique synchronous scanning structure greatly reduces the size and weight of the whole machine, and still maintains high scanning efficiency.

According to the 20/80 principle, 80% of the batch workpieces on the workshop site only need to be routinely and quickly inspected, and no detailed analysis is required, so the S400 model can be used to achieve rapid inspection. It is used for process control of production lines in semiconductor, integrated circuit, low-voltage electrical appliances and other industries. It is suitable for on-site workshops or small physical and chemical laboratories.

Application

Low cost, according to the 20/80 principle, to meet the rapid sampling of 80% of the batch workpieces on the workshop site, with a smaller footprint, effectively used in the process control of the production line. Suitable for small physical and chemical laboratories or the workshop site.



NZMS400

Test Items

- Welding quality inspection of low-voltage electrical appliances
- ●ilverpoint internal defect quality inspection
- Corrosion verification and inspection of weld defects
- Integrated circuit packaging and welding quality inspection
- Quality inspection of diamond tools
- Composite sheet layer thickness inspection/combined defect detection
- Welding quality inspection of oil sheets
- Knife grain welding quality inspection
- Welding quality inspection of power electronic devices
- Water-cooled heat sink runner and welding quality inspection
- Piezoelectric ceramic internal porosity quality inspection

Product Specification

- Maximum scanning range: 200mm × 100mm × 50mm;
- Positioning accuracy of the motion table: +0.5um in the X/Y direction, 10um in the Z direction ± Machine size: 0.5mx0.5mx0.4m
- Recommended image resolution: 1um~4000um;
- Typical scanning time: < 45s (test conditions:scanning area 10mm x 10mm, resolution:Rate 50um)
- Maximum scanning speed: 300mm/s
- Maximum scanning acceleration: 5m/s²;
- Repeat positioning accuracy: X/Y to S+0.01mm; Z ≤ +0.02mm
- Power supply: 220V/50Hz; 1kW
- Sampling frequency: 25~250MHz; (Standard, upgradable to 1.5GHz)
- Probe frequency range: 1~50MHz; (Standard, upgradable to 230MHz)
- Adjustable gain per channel: – 13~66dB; (Standard, upgradeable)
- Pulse repetition rate: 5kHz; (Standard, upgradeable)

Basic Functions

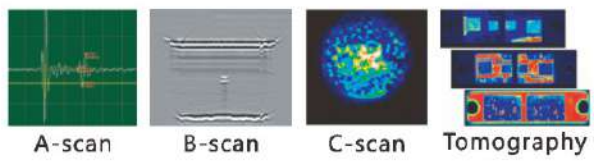

A-scan B-scan C-scan Tomography



Tatch scan Mixed scan Image analysis andautomatic calculation

Silverpoint internal defect quality inspection



WATER IMMERSION ULTRASONIC SCANNING MICROSCOPE

Product Overview

High speed – 1000mm/s scanning speed, 8m/s² scanning acceleration. Typical application fieldsThe scanning efficiency of the scene reaches 30 seconds per piece, which is X times that of the C100 model. For large quantities, small and medium-sized The fast and full inspection of dimensional workpieces provides a high-performance solution. The integral welded frame and active balance damping mechanism are used to effectively reduce the body shaking caused by high acceleration and improve the imaging quality. It is suitable for high-speed full inspection in semiconductor, integrated circuit, diamond and other industries.

Application

It is suitable for high-speed full inspection in semiconductor, low-voltage electrical appliances, water cooling and heat dissipation industries. Automatic water loading and unloading and water circulation filtration system, suitable for physical and chemical laboratory or workshop site.

Main configuration

High-speed linear motor scanning motion table, active balance and vibration damping, integral welding frame, fully enclosed protection, universal fixture, one-key calibration, remote assistance, automatic water loading and unloading and water circulation purification system.



NGSS300

Product Specification

- Maximum scanning range: 500mm x 320mm x 150mm;
- Machine size: 1m x 0.85m x 1.5m
- Sink size: 640mm x 410mm x 217mm;
- Recommended image resolution: 0.5um~4000um;
- Typical scanning time: ≤30s (test conditions 10mm x 10mm, resolution 50um)
- Maximum scanning speed: 1000mm/s
- Maximum scanning acceleration: 8m/s²
- Positioning accuracy of the motion table: X/Y +0.5um, Z +10um
- Repeat positioning accuracy: X/Y ≤+0.01mm, Z ≤+0.02mm
- Power supply: 220V/50Hz, 3kW
- Sampling frequency: 25~250MHz; (Standard, upgradable to 1.5GHz)
- Probe frequency range: 1~50MHz; (Standard, upgradable to 230MHz)
- Adjustable gain per channel: – 13~66dB; (Standard, upgradeable)
- Pulse repetition rate: 5kHz; (Standard, upgradeable)

Product Specification

Layered scanning



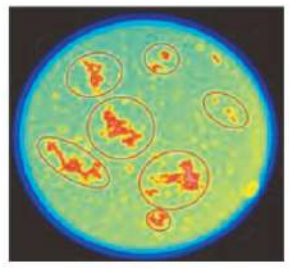

Scan for weld defects



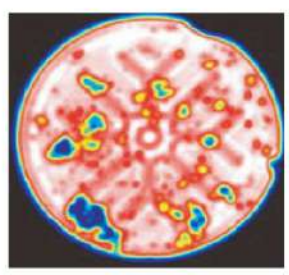

Welding section defect corrosion verification detection



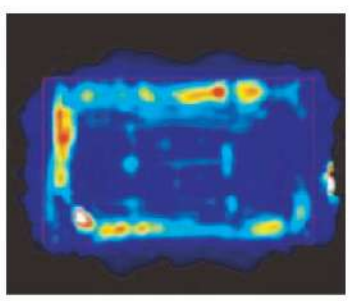



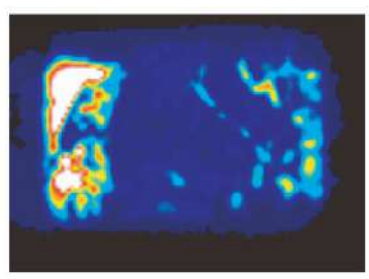

NEWJIELI

WATER IMMERSION ULTRASONIC SCANNING MICROSCOPE

Product Overview

Large size – the scanning area is 8~16 times larger than that of the S100 model. It is suitable for full inspection of large, medium and small workpieces of various sizes. It has important applications in the fields of vacuum brazing water-cooled heat sinks, carbon fiber composite materials, and large-scale welding components for low-voltage electrical appliances. It is suitable for on-site production process control and full product inspection in the workshop.

Application

It can be applied to the full inspection of medium and large workpieces, and the water tank is larger than that of ordinary models, and the scanning area is expanded. Compared with the high efficiency of small workpieces, with the set program, thousands of pieces per hour can be inspected with very few operation steps. Automatic water loading and unloading and water circulation filtration system. Suitable for workshop sites.



NDXS200



Full inspection of materials with shapes

Product Specification

- Maximum scanning range: 900mm × 600mm × 250mm;
- Machine size:1.8m x 1.3mx1.55m ;.
- Recommended image resolution: 10um~4000um;
- Typical scanning time: < 40s (test conditions:scanning area 10mmX10mm,resolution 50um)
- Positioning accuracy of the motion table: +1um in the X/Y direction, +5um in the Z direction
- Repeatability: X/Y ≤+0.02mm, Z ≤+0.02mm (>>>> need to be confirmed)
- Power supply: 220V ± 10%/50Hz, 3KW
- Host computer: industrial control computer, CPUIntell3 processor, memory 4G, hard disk 1T
- Maximum scanning speed: 500mm/s
- Maximum scanning acceleration: 3m/s2
- Sampling frequency: 25~250MHz; (Standard, upgradable to 1.5GHz)
- Probe frequency range: 1~50MHz; (Standard, upgradable to 230MHz)
- Adjustable gain per channel: – 13~66dB; (Standard, upgradeable)
- Pulse repetition rate: 5kHz; (Standard, upgradeable)

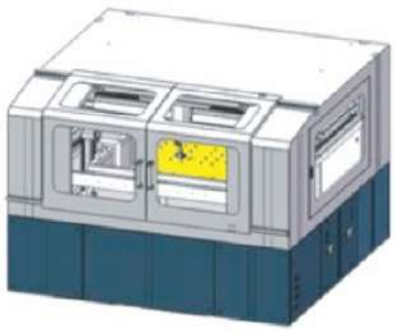

The S200M scans an area of 1200×900



The S200L scans areas 1500×1200



Full inspection of boxed materials

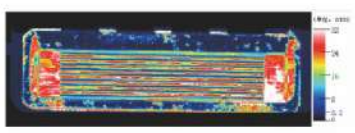

water cooling plate test 1



water cooling plate test 2



water cooling plate radiator welding defects

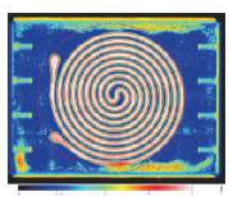

water cooling plate radiator

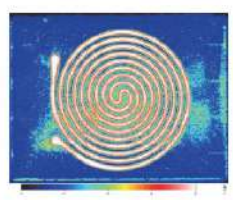

water cooling plate radiator

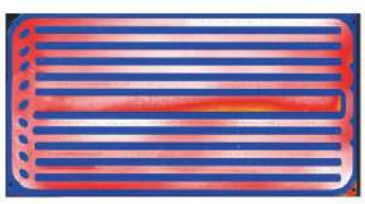

water cooling plate test 3



water cooling plate test 4

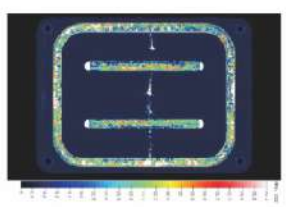

water cooling plate test 5

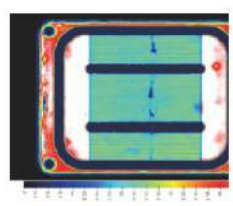

water cooling plate test 6

NEWJIELI

DIAMOND SPECIAL AII-IN-ONE MACHINE

Product Overview

- General purpose model. Wide range of use. It can be applied to sampling detection and failure of small and medium-sized parts.
- Analysis, process improvement. Qualitative analysis of materials.
- Quasi-dynamic water supply and water circulation filtration system.
- Suitable for workshops or physical and chemical laboratories.



NYTS110

Features

- High precision – classic model, high detection accuracy, and in the scanning range, motion performance,the size of the whole machine and other aspects are balanced. After 6 generations of iterative optimization, the design is mature and full.
- Sufficient semiconductors, integrated circuits, IGBT modules, low-voltage electrical appliances, diamond tools and so on.
- The general application needs of the industry.

Application

- It can be applied to on-site sampling and testing of small and medium-sized parts in the workshop, or in the physical and chemical testing laboratory.
- Failure analysis is widely used in welding/packaging process improvement, material analysis, etc.

Main configuration

Cantilever three-axis motion table, fully enclosed protection, universal fixture, one-key calibration, remote assist, automatic water loading and unloading and water circulation purification system.

Application Case

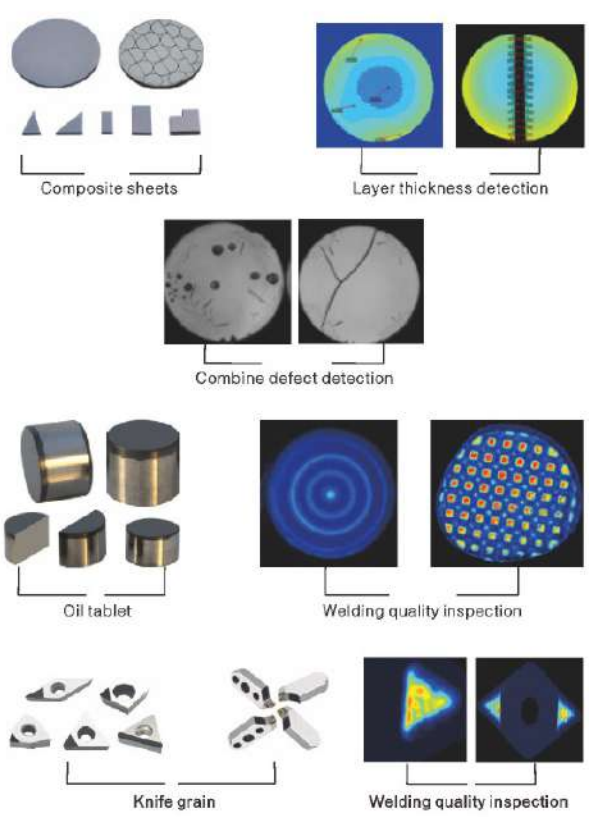

Product Specification

- Maximum scanning range: 350mm x 200mmx110mm;
- Machine size: 1.35mx0.95mx0.13m
- Typical scanning time: < 65s (Test conditions: 10mm x 10mm scan area; Resolution: 50um)
- Maximum scanning acceleration: 0.8m/s^2
- Recommended image resolution: 0.5um~4000um;
- Power supply: 220V/50Hz, 2KW;
- Sampling frequency: 25~250MHz; Standard, upgradable to 1.5GHz;
- Maximum scanning speed: 300mm/s
- Positioning accuracy of the motion table: +0.5um in the X/Y direction,
- 10um in the Z direction
- Repeat positioning accuracy: X/Y ⩽+0.01mm, Z ⩽+0.02mm
- Probe frequency range: 1~50MHz; (Standard, upgradable to 230MHz)
- Adjustable gain per channel: – 13~66dB; (Standard, upgradeable)
- Pulse repetition rate: 5kHz; (Standard, upgradeable)

Basic Functions



Online monitoring and control



One-click calibration, global machine alignment



Algorithm process customization

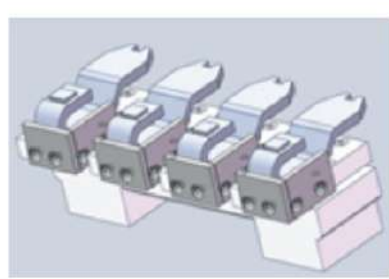

Fixture, smelting tool customization

HIGH & LOW TEMPERATURE ALTERNATING HOT & HUMID TEST CHAMBER

Features

- Has a wide temperature control range, which can meet the different temperature and humidity test needs of users;
- Adopts a unique balanced temperature adjustment method (BTHC), with extremely high temperature control accuracy (SSR output, PID
- Adjustment);
- Chinese and English interface, digital display, intuitive and easy to read;
- Temperature and humidity offset value correction to meet your more accurate test requirements;
- The box is equipped with a thermally conductive vacuum glass observation window, which can observe the status of the test samples at any time;
- The main parts and components are all imported to ensure that the equipment has extremely high reliability;
- A variety of protection functions to ensure the safe and reliable operation of the equipment.



Application

- Suitable for instrumentation, electricians, electronic products, home appliances, automobile and motorcycle parts, electronic spare parts and others related products;
- Adaptability test in high and low temperature environments.

Meet Standards

- Has a wide temperature control range, which can meet the different temperature and humidity test needs of users;
- GB11158 high temperature test chamber technical conditions;
- GB10589 low temperature test chamber technical conditions;
- GB10592-89 High and low temperature test chamber technical conditions;
- GB2423.1-2001 low temperature test chamber technical conditions;
- GB2423.2-2001 high temperature test chamber technical conditions;
- GB2423.3-1993 Technical conditions of heat and humidity test chamber;
- GB2423 • 4-1993 Alternating heat and humidity test method;
- GJB150.3 high temperature test;
- GJB150.4 low temperature test;
- GJB150.9 heat and humidity test.

Product Specification

Temperature fluctuation	±0.5℃
Uniform temperature	≤ 2.0℃
Humidity deviation	±2/3%RH(> 75%RH)
	±5%RH(< 75%RH)
Heating time	≥ 3℃ /min
Cooling time	0.8~1. 2℃ /min
Measured at room temperature of 23 ± 0.5℃, relative humidity≤85%RH, studio no-load conditions	

Dimension

Model	Work dimensions (depth x width x height)	Temperature	Power kW	Weight KG	Appearance size (length*width*height)
NWSH-100(-40~150)	400x500x500	-40C~150℃ 20%~98%RH	6	210	900 x 1050 x 1600
NWSH-150(-40~150)	500x500x600		6.5	275	1000 x 1050 x 1750
NWSH-225(-40~150)	500x600x750		7	288	1000 x 1150 x 1850
NWSH-408(-40~150)	600x800x850		8	360	1100 x 1350 x 1950
NWSH-500(-40~150)	700x800x900		9	382	1250 x 1350 x 2100
NWSH-800(-40~150)	800x1000x1000		10	533	1300 x 1550 x 2100
NWSH-1000(-40~150)	1000x1000x1000		12	563	1500 x 1600 x 2500
NWSH-100(-60~150)	400x500x500	-60℃~150℃ 20%~98%RH	7	260	850 x 1050 x 1500
NWSH-150(-60~150)	500x500x600		8	283	960 x 1050 x 1700
NWSH-225(-60~150)	500x600x750		9	325	1000 x 1150 x 1850
NWSH-408(-60~150)	600x800x850		10	410	1100 x 1350 x 1950
NWSH-500(-60~150)	700x800x900		11	420	1250 x 1350 x 2100
NWSH-800(-60~150)	800x1000x1000		12	570	1300 x 1550 x 2100
NWSH-1000(-60~150)	1000x1000x1000		14	603	1500 x 1600 x 2500

NEWJIELI

HIGH & LOW TEMPERATURE ALTERNATING HOT & HUMID TEST CHAMBER

Product Specification

Operation interface	7" color LCD touch screen (widescreen)
Mode of operation	Program/fixed value operation
Program capacity	100 x 100
Accuracy of	0.01℃
Enter	pt100.
Control mode	Anti-integral saturation P. 1. D
External mode	Computer interface, USB interface
Information recording	Real-time, historical curve query, 100-day experimental data storage
Use environment	+5~35℃ (water temperature≤29℃)
Power supply	AC380/220+10V50Hz;
Attachment	2 test racks, 1 lighting lamp, 1 power cord (3 meters)
Security configuration	Leakage protection, short circuit protection, compressor overpressure protection, compressor overload protection, fan overload protection, over temperature protection



Structure component

Shell	High-quality cold-rolled steel plate, surface electrostatic spraying
Liner	Imported high-quality stainless steel, SUS304
Insulation layer	Glass fiber cotton
Sealing material	Silicone rubber sealing strip
Observation window	Vacuum heating film glass
Lighting	Low-voltage high-luminosity lighting
Test lead	Φ25~Φ50mmLead hole (optional)
Heater	Nickel-chromium alloy electric heater
Fan	Centrifugal stainless steel
Refrigeration	Mechanical compression single-stage /laminated refrigeration
Cooling method	Air-cooled

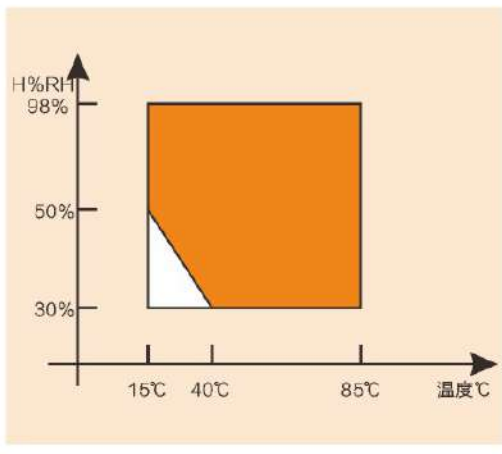

NEWJIELI

UV ACCELERATED AGING TEST CHAMBER

Product Features and Application

The UV accelerated aging test chamber is also called the "UV aging chamber ", the "UV lamp weather-resistant aging test chamber ", and the UV aging testing machine can simulate the hazards caused by sunlight, rain and dew to materials.,

UV uses fluorescent ultraviolet (UV) lamps to simulate the effect of sunlight, and cold, moisture, rain and dew are used. The material under test is placed in a cycle program of alternating light and moisture at a certain temperature for testing. UV can reproduce the hazards that occur outdoors for months to years with a few days or weeks of testing. The types of hazards include: fading, discoloration, loss of light, chalking, cracking, turbidity, foaming, brittleness, strength decline and oxidation.

It is widely used in coatings, inks, paints, resins, plastics, printing and packaging, aluminum profiles, adhesives, automobile and motorcycle industries, cosmetics, metals, electronics, electroplating, medicine, etc.



Product Specification

Exposure temperature	50℃ -70℃± 2℃，Blackboard (black standard) temperature
Condensing temperature	50℃± 2℃(humidified tank water temperature)
Degree range	⩾ 95%R.H
Distance between sample and lamp	50 ± 2mm
Center distance between lamps	70mm
Effective radiation test area	38000mm
UV lamp wavelength	280nm~315nm(Peak wavelength 315nm, 340nm optional)
Test time	Adjustable
Support boilerplate	28 pieces
Power requirements	AC220V/50HZ Single-phase three-wire system
Product specifications	Inner size :D x W x H 400 x 1150 x 500mm Dimensions :D x W x H 660 x 1310 x 1370mm

NEWJIELI

HOT AND COLD IMPACT TEST CASES

Features

- Applicable to various materials like electrical, electronic parts, semiconductors, circuit boards, metal materials, bearings and display screens, it's for destructive performance tests in rapidly changing temperature environments.
- For the three-chamber type, with high-temperature area on top and low-temperature area at bottom, specimens in the middle chamber.
- Upper air door opens for high-temp cycle in high-temp shock; lower one opens for low-temp cycle in low-temp shock. It can connect with humidity for three-chamber tests. Specimens stay still, avoiding movement issues.
- In the two-chamber type, specimens in the hanging basket moving up and down for high-low temp shocks.
- It features a CHINESE-ENGLISH interface with digital display, temperature offset correction, uses imported main components for high reliability and has multiple protection functions for safe operation.



Product Specification

Name	Model	SRC-50L	SRC-80L	SRC-100L	SRC-150L
Three-chamber thermal shock test chamber	Inner chamber dimensions (mm): D × W × H	350*400*350	500*400*400	500*500*400	600*500*500
	Temperature range	-20℃ ~+150℃	-40℃ ~+150℃		-60℃ ~+200℃
	High temperature range in the test area	+60℃ ~+200℃			
	Low temperature range in the test area	-55℃ ~-10℃, -65℃ ~-10℃, -75℃ ~-10℃			
	Shock temperature	High Temperature:60~150℃			
		Low Temperature:-40℃ ,-55℃,-65℃			
	Heating-up time	60~200℃=35mim			
	Cooling-down time	+20~.55℃ =70mim, +20~-,65℃=80mim, +20~-75℃ =90mim			
	Test method	Pneumatic damper switching, ventilation type			
	Shock recovery time	=5mim			
	Damper switching time	Within 3S			
	Temperature uniformity	+2℃			
	Power supply power	AC380V+10%50/60Hz			

Dimension

Operation interface	7" Color LCD touch screen (wide screen)
Operation mode	Program/Constant value operation
Program capacity	100*100
Accuracy	0.1℃
Input	pt100
Control method	Anti-integral saturation P.I.D
External connection	Computer interface, USB interface
Information recording	Real-time and historical curve query. 100-day experimental data storage
Operating environment	+5~35℃ (water temperature <29℃)
Power supply	AC380/220+10V50HZ
Accessories	Two specimen racks, one illuminating lamp, one power cord (4 meters long)
Safety configuration	Leakage protection, short-circuit protection, compressor overpressure protection, compressoroverload protection, fan overload protection,over-temperature protection

Outer shell	High-quality cold-rolled steel plate, surface electrostatic spraying
Inner shell	Imported high-quality stainless steel, SUS304
Insulation layer	Glass fiber cotton
Sealing material	Silicone rubber sealing strip
Observation window	Vacuum heating film glass
Illumination	Low-voltage high-intensity illuminating lamp
Test lead	425~450 lead holes (optional)
Heater	Nickel-chromium alloy electric heater
Fan	Centrifugal stainless steel
Refrigeration	Mechanical compression single-stage/cascade refrigeration
Cooling method	Air cooling

PROGRAMMABLE CONSTANT TEMPERATURE AND HUMIDITY TEST CHAMBER

Product Overview

The box body is processed and formed by CNC machine tools, with an elegant and beautiful appearance. It adopts a non-reactive handle, which is easy to operate. The inner liner of the box is made of stainless steel, while the outer shell of the box is made of A3 steel plate with plastic spraying, which increases the external texture and cleanliness.
A large observation window equipped with an illuminating lamp keeps the inside of the box bright. Moreover, by using the embedded tempered glass with a heating element, the situation inside the box can be clearly observed at any time. There is one test hole with a diameter of 50mm on each of the left and right sides of the box body, which can be used for connecting external test power supplies and signal lines simultaneously and prevent mutual interference.



Meet Standards

- GB11158 technical specifications for high-temperature test chambers
- GB10589 technical specifications for low-temperature test chambers
- GB10592-89 technical specifications for high and low temperature test chambers
- GB2423.1-2001 technical specifications for low-temperature test chambers
- GB2423.2-2001 technical specifications for high-temperature test chambers
- GB2423.3-1993 technical conditions of damp - heat test chambers
- GB2423.4-1993 alternating damp heat test methods
- GJB150.3 high-temperature test
- GJB150.4 low-temperature test
- GJB150.9 damp-heat test

Application

It is applicable to instruments and meters, electrical engineering products, electronic products, home appliances, automobile and motorcycle accessories, electronic spare parts and other related products.

Product Specification

Model		NKC-150R/L/S	NKC-225R/L/S	NKC-408R/L/S	NKC-800R/L/S	NKC-1000R/L/S
RangeCM	Working chamber	60*60*46	70*70*48	70*75*80	100*100*80	100*100*100
	Outer case	80*163.5*148.5	90*173.5*150.5	90*178.5*182	120*203.5*181.5	120*203.5*201.5
Temperature range		R-20℃ ~+150℃ ;R-40℃ ~+150℃ ;R-70℃ ~+150℃				
Temperature deviation		±2℃				
Temperature fluctuation		±0.5℃				
Temperature uniformity		±2℃				
Humidity deviation		20%~98%R.H				
Humidity range		±3.0%RH(>75%RH) ±5.0%RH(≤ 75%RH)				
Humidity uniformity		±3.0%RH(no-load)				
Humidity fluctuation		±2.0%RH				
Heating and cooling rate		Model R: +20℃ ↓ 120℃, 45min;Model L: +20℃ ↓ -40℃, 60min; Model S: +20℃ ↓ 70℃, 80min; -20℃ ↑ +100℃, 35min; -40℃ ↑ +100℃, 45min; -70℃ ↑ +100℃, 60min.				
System		Balanced Temperature and Humidity Control System				
Material of the inner chamber		Stainless Steel				
Material of the outer case		Stainless steel with electrostatic spraying surface treatment or stainless steel				
Insulating material		Rigid polyurethane foam plastic and glass fiber cotton				
Refrigeration system		Single-stage, hermetic compressor, environmentally friendly refrigerant				
		Cascade, hermetic compressor				
Controller		Display screen: 7" LCD touch screen, Chinese/English display; Operation mode: Program control, fixed value control				
Protection device		Non-fuse switch, compressor overpressure, overheating, overcurrent protection, overtemperature protection,fan overload protection, fuse, dry-burning protector, water shortage protection				
Standard accessories		1 heat-insulating glass window, 1 lead wire hole (Φ50mm), 2 sets of sample racks,1 set of lighting, 2-meter power cord				
Ambient temperature for use		+5℃ ~+35℃				
Weight (kg)		330/350/380	350/380/450	450/480/500	870/880/920	870/880/920
Power (kW)		5/6/6.5	5.5/7.2/8	5.5/7.2/8	7.2/8.5/11	7.2/8.5/11
Power supply power		AC380+10%50HzThree-phase four-wire plus ground wire / 3				

NEWJIELI

XENON LAMP AGING TEST CHAMBER

Features

The xenon lamp weather resistance test chamber uses xenon arc lamps to simulate the full sunlight spectrum and reproduce destructive light waves in different environments, providing environmental simulation and accelerated tests for research, product development and quality control. The SWX type can be used for material selection, improvement and durability evaluation. It well simulates material changes under sunlight in various conditions.

It has a full-spectrum xenon lamp, multiple filtering options, water spraying, humidity control, an irregular sample holder, cost-effective and easy-to-use lamps with little daily maintenance. The lamp's lifespan is about 500 hours and it's easy to replace. Long-lasting filters ensure the required spectrum.



Execution standard

This product is designed and manufactured strictly in accordance with the technical parameters of GB14049-1993, and also complies with relevant standards such as GB/T9344-88, GB2423.24-95, and GB/T2424.14-95.

Product Specification

Model		SWX-216	SWX-512	SWX-1000
Working chamber dimensions		60*60*60cm	80*80*80cm	100*100*100cm
Overall dimensions		110*130*175cm	130*150*195cm	150*170*215cm
Energy generation Indication	Power supply	23A	25A	30A
	Range	Temperature range: RT + 10℃ to 70℃ Humidity range: 30% to 98% RH		
	Black panel temperature	63℃ –+100℃ (+3℃)		
	illumination intensity	550W/m7-1200W/m2w		
	Spectral wavelength	290mm-800mm		
	Xenon lamp power	6KW (Lifespan: 500 hours);Lamp type: ATLAS DC long-arc xenon lamp with a lifespan of up to 1600 hours		
Control system	Accuracy range	Temperature: with an accuracy of 0.01℃; Humidity: with an accuracy of 0.1% RH		
	Temperature and humidity deviation	Temperature deviation: ± 1.0℃; Humidity deviation: ± 2.5% RH		
	Spray nozzle aperture	Φ0.8mm spray water pressure: 0.12 ˆ 0.15Mpa		
	Humidification system	Water spraying nozzle diameter: Φ 0.8mm. Water pressure for spraying: 0.12 – 0.15Mpa		
	Black panel temperature	External isolated, all-stainless-steel shallow surface evaporative humidifier		
	Water supply system	Bimetallic blackboard thermometer;The humidification water supply adopts automatic control, and the xenon lamp cooling circulation water supply is also provided		
	Temperature controller	It adopts the imported Weinview color touch screen and Siemens PLC module from Germany for control		
	Circulation system	Temperature-resistant and low-noise air-conditioning type motor, multi-blade centrifugal fan wheel		
Material	Outer box material	Cold-rolled steel plate with anti-rust treatment and painted finish		
	Inner box material	High-quality SUS304 stainless steel polished plate		
	Sample rack material	High-quality SUS304 stainless steel bars		
	Door frame heat insulation	Silicone rubber door sealing strip with resistance to high and low temperature aging		
	Standard configuration	1 set of radiation-proof glass window, 1 dynamic sample holder, 2 xenon lamps		
	Safety protection	Leakage, short circuit, over-temperature, water shortage, motor overheating and over-current protection are provided		
	Power supply voltage	AC380V ± 10%; 50 ± 0.5%Hz, three-phase five-wire system		
	Ambient temperature for use	Ambient temperature for use: 5℃ – +30℃; Relative humidity: 85%RH		
Refrigeration system	Refrigeration method	Imported Tecumseh compressor + finned all-copper evaporator + air-cooled condenser Water quality: pure water or deionized water		
	Refrigeran	Rigid polyurethane foam material (with flame retardant)Other accessories: 2 sample racks; 1 silicone plug for lead wire hole; 2 tempered defogging glasses		
	Refrigeration	DuPont HFC series environmentally friendly refrigerant from the US: R404A		
Electrical control	controller	Imported TEMI series 7" touch-type temperature and humidity instrument		
	Electrical components	Industrial control products from Schneider Electric in France, Carlo Gavazzi in Switzerland, Yangming in Taiwan, etc.		

NEWJIELI

SAND AND DUST TEST CHAMBER

Features

Dust Concentration Monitoring: Real-time monitoring of dust concentration, and dust can be automatically replenished according to the change in concentration.

Dust Blowing Direction: Automatically switch the direction of dust blowing.
Test Time: The dust blowing time (stop and blow) alternates automatically, and it is adjustable from 1 second to 9999 minutes; the vibration time (vibration and stop) alternates automatically, and it is adjustable from 1 second to 9999 minutes; the preset test time is adjustable from 0 to 99 hours and 59 minutes.

Test Wind Speed: Adjustable from (1 meter to 10 meters) per second.



Product Specification

Diameter of Metal Wire Mesh		50 μ m
Nominal Spacing		75 μ m
Usage Quantity of Talcum Powder		(2kg~4kg)/m^3
Resistance Time		0~99H59M
Fan Circulation Time		0~99H59M
Dimension	Working Chamber	1000 x 1000 x 1000mm
	Outer Box	1550 x 1800 x 1400mm
Data Recording		It is equipped with a RAM with battery protection, which can store the set values, sampling values and the time of sampling moments of the equipment. The recording time is no less than 120 days (with a sampling period of 2 minutes).
Ancillary Functions		It has functions such as fault alarm with the display of reasons and handling prompts, power failure protection, upper and lower limit temperature protection, calendar timing function (automatic start-up and automatic shutdown of operation), and self-diagnosis function.

Model Parameters

Model	NSSX-500	NSSX-800	NSSX-1000	NSSX-1500
Working chamber dimensions	800*800*800	800*1000*1000	1000*1000*1000	1000*1500*1000
Nominal wire diameter of metal screen mesh	50 μ m			
Nominal spacing between wires	75 μ m			
Airflow velocity	2m/s			
Intake pressure control	Adjustable flowmeter			
Standard amount of dust inside the chamber	2Kg/m^3~4Kg/m^3			
Material of the inner liner	High-grade stainless steel plate			
Standard configuration	Glass door with dust brush, stainless steel sample rack, Φ50mm standard lead wire hole			
Compliance with standards	GB2423.37、GB2423.38、GB2424.23、GB4208.2008 etc.			

Note: The sand and dust series of equipment are applicable to conduct enclosure sealing and internal dustproof tests for various products and components.

NEWJIELI

THE RAIN TEST CHAMBER

Product Overview

Used for waterproof tests of external lighting, signaling devices and automotive lamp housings. Also suitable for electrical and electronic, power system, communication, plastic, rubber, hardware, ceramic, textile, chemical and other fields to test if equipment and components can maintain good performance regarding housings and seals in a rainy environment.

With a scientific design, this product can realistically simulate various conditions like dripping, spraying, splashing and jetting water. As products may be affected by rain during transportation or use, it provides an application basis for product technical standards.



Product Specification

Name	Model	Working chamber dimensions L*W *H (mm)	Product Introduction
Oscillating tube rain test	NBL-A	The radius of the oscillating tube 0.6	Oscillating tube: Material – stainless steel, laser drilled; Spray hole diameter: 0.4mm; Hole spacing: 50mm; Tube diameter: 16mm; Swing amplitude: 180° ; Test bench radius: 500mm; Test bench rotational speed: 1r/min.
	NBL-B	The radius of the oscillating tube 0.1	
Box-type rain test	NLX-500	800 x 800 x 800	Tube diameter: 16mm; Spray hole diameter: 0.4mm; Hole spacing: 50mm; Inner liner: Stainless steel; Visible glass door: Equipped with a suitable circular turntable for samples; Oscillating tube swing amplitude: Adjustable between 90° and 180° ; Rotational speed: Adjustable.
	NLX-1200	1020 x 1020 x 1000	
The rain test series of equipment is suitable for conducting rain and drip tests on electrotechnical products, various outdoor products and their components, parts and materials.			

NEWJIELI

WALK IN TEST CHAMBER

Features

- The test chamber body is assembled with snap-lock type panels, featuring high surface flatness, and it looks elegant and beautiful.
- The outer shell is made of spray-coated panels, the inner liner is made of stainless steel, and the thermal insulation layer is made of foamed polyurethane.
- The test chamber has double doors and is equipped with an observation window, which makes it convenient to observe the test conditions inside the chamber.
- On the left side of the test chamber is the control cabinet, inside which electronic intelligent control instruments, circuit boards and other components are installed.
- The machinery room is located in the test chamber, where the refrigeration unit, heater, dehumidifier and humidifying boiler are installed.
- The working volume of the studio ranges from 10 to 200 cubic meters, which is suitable for the entry and exit of large or large-batch samples and can meet the needs of large-batch tests.
- It is easy to operate. With a touch screen, digital display, what you see is what you get. Programs can be set programmatically, and the running curve graph can also be displayed.
- Thermal balance control is adopted, and the circulating air flow inside the chamber meets the temperature and humidity requirements of customers.
- It has high control accuracy, can provide a wide range of climatic environments, and meets the requirements of tests with high precision.
- An indoor lighting device is provided.
- Imported well-known brand refrigeration compressors are used to fully ensure the refrigeration power and efficiency as well as the service life of the refrigeration unit. It has various fault display functions, can intelligently judge the location and cause of faults, facilitating product maintenance.



Equipment Parameter

- Dust concentration monitoring: Monitor the dust concentration in real time, and automatically replenish dust according to the change in concentration.
- Dust blowing direction: Automatically switch the direction of dust blowing.
- Test time: The dust blowing time (stop, blow) alternates automatically, and is adjustable from 1 second to 9999 minutes; the vibration time (vibration and stop) alternates automatically, and is adjustable from 1 second to 9999 minutes; the preset test time is adjustable from 0 to 99 hours and 59 minutes.
- Test wind speed: Adjustable from 1 meter to 10 meters per second.

Control Parameter

Operation interface	7 "Color LCD Touch Screen (Widescreen)
Mode of operation	Program/set-value operation
Program capacity	100 x 100
Precision	0.01℃
Input	pt100.
Control method	Anti – integral saturation PID
External interface	Computer interface, USB interface
Record	Real-time, historical curve query, 100-day experimental data storage
Operating environment	+5℃ to 35℃ (water temperature < 29℃).
Power supply	AC380/220 ± 10V50Hz
Accessory	One illuminating lamp and one power cord (4 meters long)
Security configuration	Leakage protection, short-circuit protection, compressor overpressure protection, compressor overload protection, fan overload protection, overtemperature protection

Technical Parameter

Temperature control range	-60℃~+85℃
Humidity adjustment range	20%~98%RH
Refrigerating method	Binary cascade mechanical compression refrigeration (water-cooled)
Power supply	380V+38V50Hz+0.5Hz
Power	35~180KW
Control method	Heat – balance control
Temperature fluctuation	≤ ±0.5℃
Temperature uniformity	≤ 2℃
Humidity uniformity	±5%RH
Test chamber dimensions	Customization

NEWJIELI

OZONE AGING TEST CHAMBER

Features

The ozone aging test chamber is used for rubber products such as vulcanized rubber, thermoplastic rubber, cable insulation sheaths and other products. Under static tensile deformation, the samples are exposed to the air with a constant ozone concentration in a closed, non-illuminated test chamber at a constant temperature. The samples are tested at predetermined times, and the degree of cracking or changes in other properties on the surface of the samples is observed to evaluate the ozone aging resistance performance of the rubber.



Product Application

It is widely used to test various performance indicators of parts and materials of related products in electronics and electrical engineering, automobiles and motorcycles, aerospace, naval weapons, institutions of higher education, scientific research institutions and so on under the conditions of high and low temperature cycles and constant damp-heat changes. The products have a relatively wide temperature control range.

Executive Standard

All of its performance indicators meet the technical requirements for high and low temperature test chambers specified in the national standard GB10592-89. It is applicable to conducting high temperature and constant damp-heat tests on products in accordance with GB2423.1, GB2423.2, and GB2423.3 (Environmental Testing for Electrical and Electronic Products - Test A: Low Temperature Test Methods, Test B: High Temperature Test Methods, Test C: Constant Damp-Heat Test Methods). The product complies with the standards of GB2423.1, GB2423.2, GJB150.3, GJB150.4, IEC, and MIL.

Control Parameter

Model		100(A-B)	150(A-8)	225(A-B)	306(A-B)	408(A-B)	800(A-B)	1000(A-B)
Size (cm)	Test chamber	40*50*50	60*50*50	75*50*60	85*60*60	85*60*80	100*100*80	100*100*100
	Outer box	100*100*165	150*70*102	165*70*112	175*80*102	175*80*132	190*120*132	190*120*152
Temperature range		20%~98%RH						
Ozone generation method		Ozone generator or ultraviolet absorption method						
Temperature stability		±0.5℃						
Temperature uniformity		±2℃						
Temperature deviation		≥ ±2℃						
Ozone concentration		Adjustable from 0 to 1000 pphm						
Ozone concentration fluctuation		10%						

Customize All Kinds of Non-standard Test Chambers



Non-standard Constant Temperature and Humidity Test Chamber



High-Low Temperature Tensile Testing Machine



Comprehensive Test Chamber

NEWJIELI

SEMI-AUTOMATIC IMAGE MEASURING INSTRUMENT

Product Overview

The NY-S series products are semi-automatic image measuring instruments. The XY axes are manually operated while the Z axis can be automatically lifted and lowered, with automatic focusing, making them easy to use. They are suitable for measuring products in small batches and with multiple varieties, and are applicable to industries such as precision hardware, plastics, magnetic materials, connectors, medical treatment, watches and clocks, and molds.



Features

- High-precision granite structure and working platform, ensuring stability and reliability
- Automatic focusing, which avoids human errors and improves measurement accuracy
- Eight-zone surface light source, fully meeting the complex lighting requirements of different workpieces
- Designed with a precision transmission mechanism, enabling accurate positioning and rapid movement
- Precision crossed roller guide, providing smooth and stable movement
- Capable of focusing for height measurement and can be equipped with contact probes
- Measurement data can be exported to Word, Excel and Auto CAD
- Customized design can be provided according to customers' needs

Software Measurement Function

- Measurable geometric features: points, lines, circles, arcs, spline curves, ellipses, rectangles, quadrilaterals, grooves, fillets, rings, distances, etc.
- Constructions: center points, endpoints, intersection points, lines connecting two points, parallel lines, perpendicular lines, tangent lines, bisectors, centerlines, inscribed circles, etc.
- Image measurement tools: drawing points, nearest edge points, focusing points, circular framing points, overall extraction, multi-segment extraction, quick circle extraction by sorting.
- Geometric tolerances: straightness, roundness, position tolerance, parallelism, perpendicularity, angularity, concentricity, etc.
- Coordinate systems: fixture positioning coordinate systems, point-line, two-point X, two-point Y, two-line; translation, rotation, manual adjustment of coordinate systems.

Technical Data

Model		NY30S	NY40S
Stroke (mm)	X	300	400
	Y	200	300
	Z	200	200
External dimensions (cm)		110 x 75 x 160	124 x 80 x 160
Total weight (Kg)		240	310
Machine load bearing (Kg)		25	25
Measurement accuracy (μ m)		Exv=(3+L/200)	Exv=(3.5+L/200)
Guide rail		Crossed roller guideway	
CCD		High resolution color/black and white 1/3 "CCD"	
Grating rulers		1 μ m grating ruler	
Lens		Manual zoom locking lens with a continuous zoom ratio of 6.5:1	
Magnification		Optical magnification: 0.7X~4.5X; Total magnification: 28X~190X	
Light sources	Surface light	The brightness of the 8-zone LED programmable light source is continuously adjustable	
	Contour light	The brightness of the LED parallel light source is continuously adjustable	
Software		S-VisionBasic	
Power supply		220V ± 10%, 50Hz, power: 500W	
Working environment		Temperature: 20℃ ± 2℃, temperature variation: less than 2° C/hr, humidity: 40%~80%, vibration: less than 0.002g (below 15Hz)	

NEWJIELI

SALT SPRAY TESTING MACHINE

Product Overview

Salt spray corrosion test chamber, also known as salt spray testing machine or spray-type salt spray testing machine, is a device that can simulate the salt spray dispersion environment composed of tiny salt-containing droplets in the atmosphere. It is widely used in the surface of parts and components of electronics and electrical engineering, automobiles, aviation, mobile phone communications, motorcycles, plastics, machinery, etc., as well as electronic components and metal materials, to conduct salt spray corrosion tests on the whole or protective coatings. This equipment consists of the chamber body, the chamber body heating system, the humidifying system, the saturation system, the electrical control system, the air supply system, the protection system and so on.



Features

- Spray method: A (continuous salt spray testing machine) ; B (programmable salt spray testing machine)
- The full detection system can be displayed with lights when a fault occurs.
- The whole machine is made of imported 5MMPVC board, with strong structure, never deformed, and resistant to acid and alkali, high temperature and never aging.
- The precision glass nozzle mist spreads evenly and naturally falls on the test piece to ensure that there is no crystalline salt blockage.
- The controllers are all on the same board, which is easy to operate and easy to see at a glance.
- It is equipped with double temperature protection, and the water level is insufficient to warn to ensure the safety of use.
- The imported temperature controller has manual and automatic control mode, using digital display, PID control, error ±0.1℃, and the maximum setting time can reach 999HrS.
- The laboratory adopts the direct heating method of steam, which is fast and uniform in heating speed and shortens the standby time.
- The spray tower is equipped with a conical disperser, which has the functions of guiding the fog, adjusting the fog volume and evenly falling the fog.
- The pressure drum adopts Henry's law to heat and humidify, and provides the humidity required by the laboratory.
- The upper cover of the test tank of the oversized model is automatically opened and closed by a pneumatic cylinder, which is easy to operate and has good safety.
- After the test is completed, it has an automatic defogging device, which can clearly observe the samples in the laboratory.

Technical Data

Item	Model				
	60 Type	90 Type	120 Type	160 Type	200 Type
The inner box dimensions (L × W × Lt) of the laboratory chamber in millimeters	600*450*400	900*600*500	1200*1000*500	1600*1000*600	2000*1000*600
The outer box dimensions are approximately (L × W × L) in millimeters	1075*630*1185	1400*800*1385	1900*1400*1300	2250*1350*1300	2700*1200*1485
Laboratory temperature	Salt water test 35℃ ± 1℃				
Saturation barrel temperature	Salt water test 47℃ ± 1℃				
pH	Salt water test (6.5~ 7.2)/Acid test (3.0~ 3.2)				
Salt water temperature	35° C ± 1° C sodium chloride solution concentration 5%				
Compressed air pressure	1.00 ± 0.01kgf/cm				
Spray volume	1.0~2.0ml/80cm/h				
Laboratory relative humidity	More than 85%				
Spray method	Continuous spraying; Programmable spraying (including continuous spraying and intermittent spraying)				
Laboratory volume	108L	270L	720L	800L	1200L
Brine tank volume	15L	25L	35L	45L	45L
Power supply	1 ϕ , AC220V10A	1 ϕ , AC220V15A	1 ϕ , AC220V20A	1 ϕ , AC220V,20A	1 ϕ , AC220V,20A

Product Overview

A Water Leakage Detector is a special instrument used to detect and locate the leak point of a water supply pipeline. It can also be employed for leak detection in other pressure pipeline systems. When the fluid in the pipeline leaks under pressure, the noise can be transmitted along the pipeline or spread to the ground through the buried medium. The leak detector can pinpoint the leak point along the pipeline or above its pavement. The SJL – 2000 Water Leakage Detector is a device that utilizes a low – power microprocessor and an advanced special filter for digital noise processing. It employs a specially designed broadband high – sensitivity vibration sensor (vibration pickup) to detect the ground (or pipe mouth) noise and convert it into electrical signals. After corresponding amplification and digital filtering processing, the results are displayed on the LCD screen in two display modes.



Features

It adopts a dot–matrix liquid crystal display screen that can be backlit, with seven vertical light columns, which is convenient for observation at night. It is specially equipped with two levels of bandwidth variation, which not only takes into account the richness of vibration energy distribution during the audiometry process but also enables more detailed frequency analysis. It is also specially equipped with storage for nine channels, which can store either the seven–band signals or the measured values of seven measuring points respectively. The designed special engineering plastic chassis and the corresponding panel operations are very simple and clear, and a wide range of definite information can be obtained through simple operation methods, making the actual leak detection work convenient and easy.

Technical Data

Model	NLJ–2000				NLJ–3000		
Frequency of use	2000Hz				3000Hz		
Frequency analysis	Analysis width: 70~ 2000Hz range, nearly 5 octaves, 2 bandwidths						
Frequency Binning (Central Frequency)	100Hz	200Hz	300Hz	400Hz	1000Hz	1500Hz	2000Hz
Bandwidth	Narrow band: marking symbol III				Medium band: marking symbol IIIII		
Numerical display	Correspondingly on the display bar, the sample value is displayed as the minimum value with a relative magnitude between 0 and 100						
	Screen 160X160 pixel LCD display window						
Power supply mode	A set of lithium batteries with a charging function. After the battery is fully charged, the power supply working time is > 35 hours						
Storage mode	9 measurements are stored, 9 channels are stored and viewed separately						
Operating temperature	–10℃~+ 50℃						
Storage temperature	–10℃~+70℃						
Instrument size	Length x Width x Height (LxWxD): 230X100X100mm						
Weight	NLJ–2000 Main box internals (including battery) 1.2kg				NLJ–2000 Vibration pickup (with seat plug–in cable) 0.6kg		
Gross weight	Total weight of suitcase bag: 5.2kg						

NEWJIELI

SURFACE ROUGHNESS MEASURING INSTRUMENT

Product Overview

The NTR-200 surface roughness measuring instrument, which is a handheld device, is well-suited for production environments and mobile measurement requirements. It exhibits remarkable characteristics such as easy operation, comprehensive functionality, rapid measurement capabilities, stable accuracy, and convenient portability. It has the ability to measure the main parameters in line with the latest international standards. Moreover, this instrument fully and strictly adheres to international standards.



NTR-200

Features

- This product features a mechatronics design, which is small in size, light in weight and convenient to use.
- It is equipped with a high-precision inductive sensor.
- It adopts a DSP chip for control and data processing, showing high speed and low power consumption.
- It has a GAUSS filter.
- It has a 128 × 64 dot-matrix OLED liquid crystal screen.
- The built-in lithium-ion rechargeable battery and its charging control circuit possess high capacity, no memory effect and a continuous working time of more than 20 hours.
- It is furnished with functions such as automatic shutdown, memory and various information-displaying functions.
- Optional accessories like curved surface sensors, small hole sensors, measurement platforms and extension rods can be chosen.
- It is compatible with multiple national standards including ISO, DIN, ANSI and JIS.
- The system language can be switched between Chinese and English, and the Chinese system is the default when it is powered on.
- The units can be changed in sequence from the metric system to the imperial system, with the metric system being the default.

Technical Data

Measuring range	Z axis (vertical)	200 µm
	X-axis (horizontal)	15mm
Resolution	Z axis (vertical)	0.01 µm / ±20 µm
		0.02 µm / ±40 µm
		0.04 µm / ±80 µm
Measurement item	Parameter	Ra, Rq, Rsm, Rsk, Rz, Rt, Rp, Rv, RC, Rco
	Standard	ISO, ANSI, DIN, JIS
	Graphics	Supporting Ratio Curve, roughness Profile, direct Profile
Filter		GAUSS filter
Sample length (lr)		0.25, 0.8, 2.5mm
Rating length (ln)		Ln=lrxn; n=1~5
Sensor	Measurement principle	Displacement - type Differential Inductance
	Stylus	Natural diamond, 90 cone angle, 5 µm tip radius
	Force measurement	<4mN
	Guide head	Carbide, glide direction radius 45mm
	Glide speed	lr=0.25, Vt=0.135mm/s
		lr=0.8, Vt=0.5mm/s
		lr=2.5, Vt=1mm/s
		Back, Vt=1mm/s
Indication error		≤ ±10%
Indication variability		≤6%
Power supply		Built-in lithium-ion rechargeable battery, charged by DC5V, 800mA charger
External dimensions		158x63.5x46mm
Weight		About 300g
Working environment		Temperature: -40 ℃~ 60 ℃ Humidity: < 90% RH
Storage and transportation environment		Temperature: -40 ℃~ 60 ℃ Humidity: < 90% RH



NEWJIELI

+86 178 5809 7744
bm@newjieli.com
Wei 11th Road, Yueqing economic Development Zone,
Yueqing City,Zhejiang Province