

NEW BEGINNING
NEW FUTURE

Metering Business Segments of
Jieli's Four Major Industries

NEWJIELI

- HIGH QUALITY
- COMPETITIVE PRICE
- ONE-STOP SERVICE
- OEM&ODM PROVIDED

NEWJIELI

PRODUCT CONTENTS



Mechanical instrument series 001

Digital torque wrench 002

Torque screwdriver 012

Digital push pull force gauge 015

Tension meter 019

Torque tester 024

Tension & pressure testing machine 031

Fixture series 044



Measuring tool series 046

Digital level / goniometer 047

Digital display roller scale 049

Micrometer 050

Caliper 053

Gauge meter stand 067



Indicator series 068

Raster indicator 069

Dial indicator 071

Dial indicator 073

Thickness gauge 074

Pipe gauge 078

Depthometer 079

Digital display snap gauge 080

Focused on providing high-quality measurement tools and instruments



Hardness series 082

Hardness tester 083

Metallographic specimen 096

Shore hardness tester 096

Hardness test stand 097



Automatic series 098

Displacement sensor 099

Split digital dial indicator 108

Vertical digital dial indicator 109

Data collector 110

Assembly hub 111

RA multi-functional roundness detector 112

Concentricity measuring instrument 113



Nondestructive testing series 116

Water immersion ultrasonic scanning microscope 117

Diamond special all-in-one machine 121

Test chamber 122

Semi-automatic image measuring instrument 132

Salt spray testing machine 133

Leak detector 134

Surface roughness measuring instrument 135

NEWJIELI

Focused on providing high-quality measurement tools and instruments

Mechanical instrument series

- HIGH QUALITY
- COMPETITIVE PRICE
- ONE-STOP SERVICE
- OEM&ODM PROVIDED









NEWJIELI

MINI DIGITAL TORQUE WRENCH

Product Overview

The MINI-Digital Display Torque Wrench has a mini-style viewing screen. The wrench is small and exquisite in size and is suitable for use in narrow spaces. It also has a wealth of functions, including setting torque, setting units (N.m, kgf.cm, lbf.ft, lbf.in), storing data, and deleting data. The digital display screen also reduces the difficulty of operation and user requirements. It is widely used in the fastening and control bolt work of the automobile industry, machinery industry and other industries.



Features

- Digital display torque reading value
- ±2% clockwise, ±2.5% counterclockwise accuracy (20~100% of the maximum operating range)
- Can be operated clockwise and counterclockwise
- Peak hold and real-time mode
- Buzzer and LCD indication (when the predetermined torque value is reached)
- Four types of engineering units (ft. lb, in. lb, N. m, kgf.cm)
- 999 groups can store recorded values
- Automatic shutdown in 5 minutes

Application

Dedicated to detecting various bolts, screws and other fasteners, etc.
Tool for tightening and loosening force.

Functions

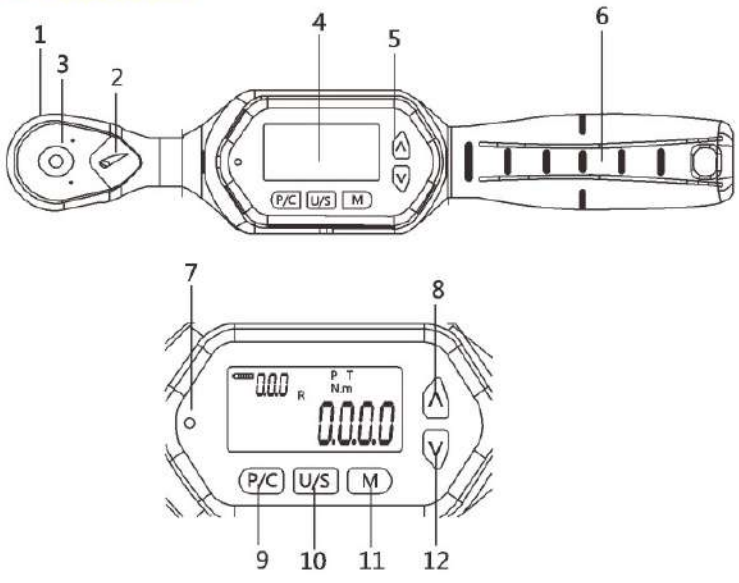

1. Two-way ratchet head
2. Steering picks
3. Ratchet torque square head
4. LCD screen
5. Button
6. Grip
7. LED indicator light
8. Up button
9. Cancel button
10. Ok button
11. Menu button
12. Press down button

Product Specification

Model	With communication	NMB-10	NMB-30	NMB-60	NMB-100
Max operating range	N. m	10	30	60	100
	ft. lb	7.37	22.12	44.25	73.7
	in. lb	88.5	265.5	531.04	885
	kgf. cm	101.97	305.91	611.82	1019.7
Min load value (N.m)		0.01		0.1	
Buzzer setting range(N.m)		0.3~10	0.9~30	1.8~60	3~100
Length(mm)		230		240	285
Connector (Inches)		1/4		3/8	1/2
Accuracy		Clockwise: ±2% Counterclockwise: ±2.5%			
Data storage capacity		999			
Number of rachet head teeth		36			
Rachet head form		Two-way ratchet head			
Unit		N.m、ft.lb、in.lb、kgf.cm			
Key number		5			
Operating mode		Peak mode (P) Real-time mode (T) Preset value mode (Pre)			
Battery		2 pcs 7# batteries			
Operating temperature		-10℃ ~ 60℃			
Storage temperature		-20℃ ~ 70℃			
Humidity		Up to 90% non-condensing%			
Fall test height		1 m			
Vibration test condition*2		10G			
Life test*3		10000 times			

MINI INTERCHANGEABLE HEAD DIGITAL TORQUE WRENCH

Product Overview

The NMB-C Torque Wrench has a mini-style viewing screen. The wrench is small and exquisite in size and is suitable for use in narrow spaces. It also has a wealth of functions, including setting torque, setting units (N.m, kgf.cm, lbf.ft, lbf.in), storing data, and deleting data. The digital display screen also reduces the difficulty of operation and user requirements. It is widely used in the fastening and control bolt work of the automobile industry, machinery industry and other industries.



Features

- Digital display torque reading value
- ±2% clockwise, ±2.5% counterclockwise accuracy (20~100% of the maximum operating range)
- Can be operated clockwise and counterclockwise
- Peak hold and real-time mode
- Buzzer and LCD indication (when the predetermined torque value is reached)
- Four types of engineering units (ft. lb, in. lb, N. m, kgf.cm)
- 999 groups can store recorded values
- Automatic shutdown in 5 minutes

Application

Dedicated to detecting various bolts, screws and other fasteners, etc.
Tool for tightening and loosening force.

Functions

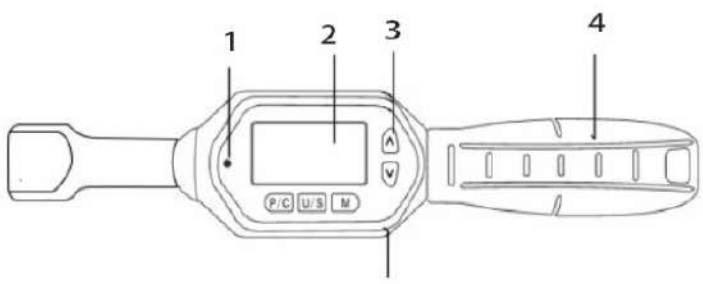

1.Indicator light
2. LCD screen
3. Function key
4. Grip
5.Buzzer

Product Specification

Model	With communication	NMB-C-10	NMB-C-30	NMB-C-60	NMB-C-100
Max operating range	N. m	10	30	60	100
	ft. lb	7.37	22.12	44.25	73.7
	in. lb	88.5	265.5	531.04	885
	kgf. cm	101.97	305.91	611.82	1019.7
Min load value (N.m)		0.01	0.01	0.01	0.1
Buzzer setting range(N.m)		0.3-10	0.9-30	1.8-60	3-100
Length(mm)		200			
Connector		9*12			
Accuracy		Clockwise: ±2% Counterclockwise: ±2.5%			
Data storage capacity		100			
Unit		N.m、ft.lb、in.lb、kgf.cm			
Key number		5			
Battery		2 pcs 7# batteries			
Operating temperature		-10℃ ~ 60℃			
Storage temperature		-20℃ ~ 70℃			
Humidity		Up to 90% non-condensing%			

NEWJIELI

ECONOMICAL DIGITAL TORQUE WRENCH

Product Overview

The ratchet head display torque wrench differs from general torque wrenches, featuring powerful operational functions including torque setting, unit setting, mode setting, value storage, value clearing, value output, and user calibration. It is user-friendly, reducing the skill requirements for operators through the installation of a digital display. It is applicable in the tightening and control of bolts in industries such as the automotive and machinery sectors.



Features

- Digital display torque reading value
- ± 2% clockwise, ± 2.5% counterclockwise accuracy (20~100% of the maximum operating range)
- Can be operated clockwise and counterclockwise
- Peak hold and real-time mode
- Buzzer and LCD indication (when the predetermined torque value is reached)
- Four types of engineering units (ft. lb, in. lb, N. m, kgf.cm)
- 999 groups can store recorded values
- Automatic shutdown in 5 minutes

Application

Dedicated to detecting various bolts, screws and other fasteners, etc.
Tool for tightening and loosening force.

Functions

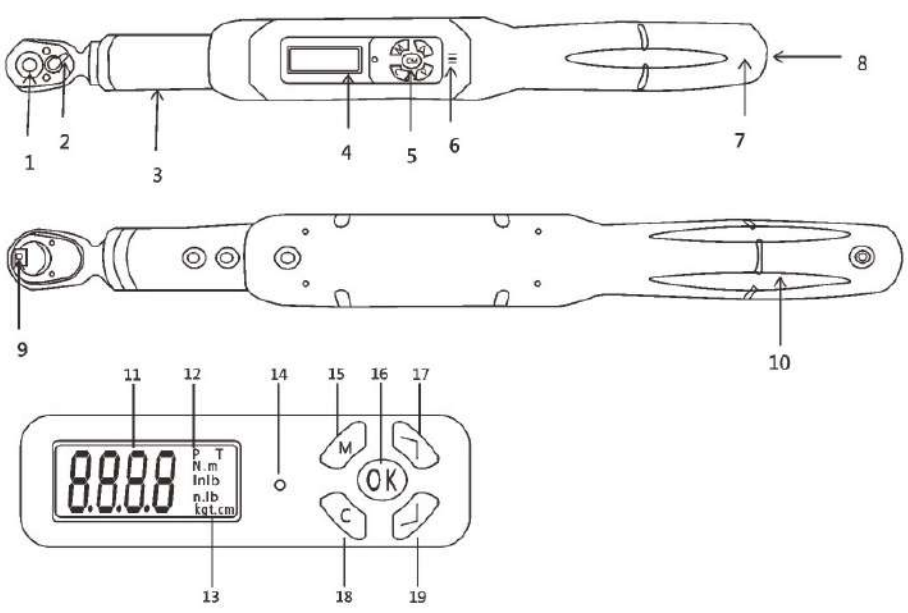

1. Preassembled ratchet head (replaceable)
2. Sensor
3. Subject
4. LCD screen
5. Button
6. Buzzer
7. Battery case
8. Battery cover
9. Ratchet torque box
10. Handle
11. Torque value
12. Peak mode, real-time mode
13. Unit
14. LED indicator light
15. Menu button
16. Confirm the key
17 Upward key
18. Cancel button
19. Press the down button

Product Specification

Model	With communication	NBS2-10	NBS2-30	NBS3-30	NBS3-60	NBS3-85	NBS3-135	NBS4-135	NBS4-200	NBS4-340	NBS6-500	NBS6-850
Max operating range	N. m	10	30	30	60	85	135	135	200	340	500	850
	ft. lb	7.37	22.12	22.12	44.25	62.69	99.57	99.57	147.5	250	368.7	626.8
	in. lb	88.5	265.5	265.5	531.04	752.31	1195	1195	1770	3009	4424	7521
	kgf. cm	101.97	305.91	305.91	611.82	866.75	1376.61	1376.61	2039.43	3467.03	5098.59	8667.58
Min load value (N.m)		0.01					0.1					
Connector size(inches)		1/4		3/8				1/2			3/4	
Length(mm)		390		420				535		655	950	1220
Accuracy		Clockwise: ± 2% Counterclockwise: ± 2.5%										
Data storage capacity		100										
Key number		5										
Number of rachet head teeth		45									24	
Rachet head form		Two-way ratchet head										
Unit		N.m、kgf.cm、lbf.ft、lbf.in										
Operating mode		Peak mode (P) Real-time mode (T) Preset value mode (Pre)										
Battery		3.7V Lithium Battery										
Operating temperature		-10℃ ~ 60℃										
Storage temperature		-20℃ ~ 70℃										
Humidity		Up to 90% non-condensing%										
Fall test height		1 m										
Vibration test condition*2		10G										
Life test*3		10000 times										

REPLACEABLE HEAD ECONOMICAL DIGITAL TORQUE WRENCH

Product Overview

Economical interchangeable-head digital torque wrench is different from ordinary torque wrenches. The ratchet head that comes with it can be replaced with plug-ins such as open head, plum blossom head, and movable open head at will. Both have powerful operating functions at the same time, including torque setting; unit setting; mode setting; value storage; value clearing; Numerical output and user correction function. It is easy to operate, and the requirements for operators are reduced by installing a digital display. It is suitable for bolt fastening and control in the automotive industry, machinery industry, etc.



Features

- Digital display torque reading value
- ±2% clockwise, ±2.5% counterclockwise accuracy (20~100% of the maximum operating range)
- Can be operated clockwise and counterclockwise
- Peak hold and real-time mode
- Buzzer and LCD indication (when the predetermined torque value is reached)
- Four types of engineering units (ft. lb, in. lb, N. m, kgf.cm)
- 999 groups can store recorded values
- Automatic shutdown in 5 minutes

Application

Dedicated to detecting various bolts, screws and other fasteners, etc.
Tool for tightening and loosening force.

Functions

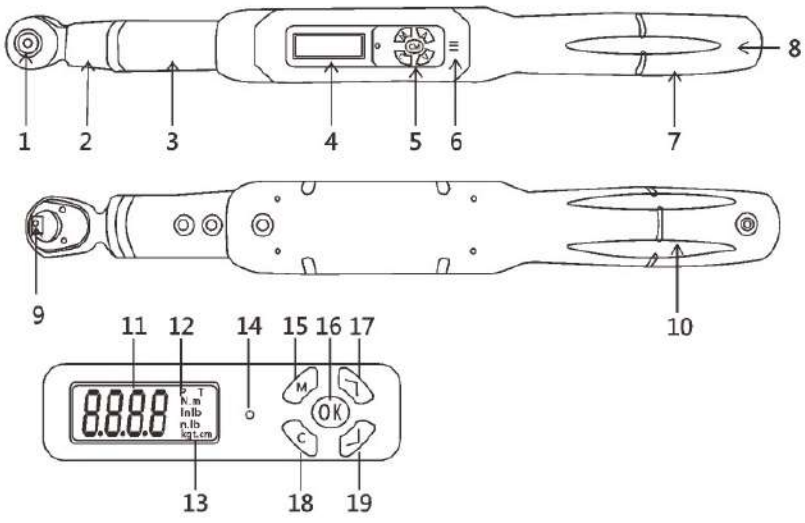

1. Preassembled ratchet head (replaceable)
2. Sensor
3. Subject
4. LCD screen
5. Button
6. Buzzer
7. Battery case
8. Battery cover
9. Ratchet torque box
10. Handle
11. Torque value
12. Peak mode, real-time mode
13. Unit
14. LED indicator light
15. Menu button
16. Confirm the key
17 Upward key
18. Cancel button
19. Press the down button

Product Specification

Model	With communication	NBS-C1-10	NBS-C1-30	NBS-C1-30	NBS-C1-60	NBS-C1-85	NBS-C2-135	NBS-C2-135	NBS-C2-200	NBS-C2-340
Max operating range	N. m	10	30	30	60	85	135	135	200	340
	ft. lb	7.37	22.12	22.12	44.25	62.69	99.57	99.57	147.5	250
	in. lb	88.5	265.5	265.5	531.04	752.31	1195	1195	1770	3009
	kgf. cm	101.97	305.91	305.91	611.82	866.75	1376.61	1376.61	2039.43	3467.03
Min load value (N.m)		0.01						0.1		
Buzzer setting range(N.m)		0.5-10	1.5-30		2-60	4.25-85	6.75-135		10-200	17-340
Length(mm)		390		420				535		655
Interchangeable connector size		9*12						14*18		
Accuracy		Clockwise: ±2% Counterclockwise: ±2.5%								
Data storage capacity		100								
Rachet head form		Pre-installed ratchet head, open head, plum blossom head, movable open head and other plug-ins								
Key number		5								
Unit		N.m、lbf.in、lbf.ft、kgf.cm								
Operating mode		Peak mode (P) Real-time mode (T) Preset value mode (Pre)								
Battery		2 pcs 1.5V 5 #batteries								
Operating temperature		-10℃ ~ 60℃								
Storage temperature		-20℃ ~ 70℃								
Humidity		Up to 90% non-condensing%								
Fall test height		1 m								
Vibration test condition*2		10G								
Life test*3		10000 times								

NEWJIELI

WIRELESS DIITAL TORQUE WRENCH

Product Overview

The wireless digital display wrench has a wireless transmission function, sound and light alarm, and powerful operating functions, including torque setting; unit setting; value storage; value clearing; value output and user correction functions. With high accuracy, accurate measurement, stable performance and simple operation, the requirements for operators are reduced by installing a digital display screen. It is suitable for bolt fastening and control in the automotive industry, machinery industry, etc.



Features

- Backlight function, clear reading of measurement data
- Can be operated clockwise and counterclockwise(set mode)
- Measurement mode: three measurement modes: real-time mode, peak mode and preset mode
- Has the function of storing and recording values
- It has the function of wireless data transmission.
  ± 2% clockwise, ± 5% counterclockwise accuracy (20~100% of full scale)
- The buzzer and LED indicate that it will be triggered when the predetermined torque value is reached (peak mode only and pre-
- Four types of engineering units (N.m,kgf.cm , lbf.ft,lbf.in)

Application

A tool dedicated to detecting the tightening and loosening forces of various bolts, screws, and other fasteners.

Functions

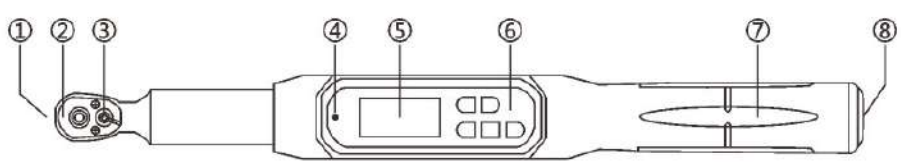

1.Ratchet Torque Wrench (Back Side)
2.Dual-direction ratchet head
3.Shift paddle
4.Indicator light
5.LCD Liquid Crystal Display
6.Function keys
7.Handle
8.Battery cover

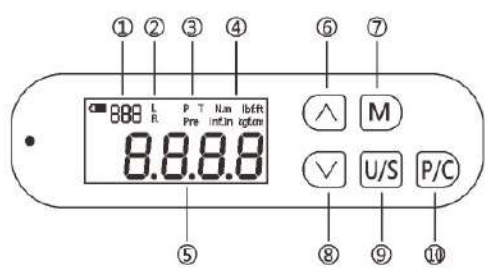

1. Stored value
2. Work direction
3. Operation mode
4. Unit
5. Torque value
6. Up key/Operation mode key
7. Save Key/Storage Data View Key
8. Down key/Predefined value adjustment key
9. Menu/Unit key
10. Power Key/Reset Key

Product Specification

Model	With communication	NWJW-10	NWJW-30A	NWJW-30B	NWJW-60	NWJW-85	NWJW-135A	NWJW-135B	NWJW-200	NWJW-340	NWJW-500	NWJW-850
Max operating range	N. m	10	30	30	60	85	135	135	200	340	500	850
	ft. lb	7.37	22.12	22.12	44.25	62.69	99.57	99.57	147.5	250	368.7	626.8
	in. lb	88.5	265.5	265.5	531.04	752.31	1195	1195	1770	3009	4424	7521
	kgf. cm	101.97	305.91	305.91	611.82	866.75	1376.61	1376.61	2039.43	3467.03	5098.59	8667.58
Min load value (N.m)		0.01					0.1					
Buzzer setting range(N.m)		0.5-10	1.5-30		2-60	4.25-85	6.75-135		10-200	17-340	25-500	42.5-850
Connector size(inches)		1/4		3/8				1/2			3/4	
Length(mm)		390		420				535	655		950	1220
Accuracy		Clockwise: ±2% Counterclockwise: ±2.5%									Clockwise: ±2.5% Counterclockwise: ±3.5%	
Number of rachet head teeth		45									24	
Rachet head form		Two-way ratchet head										
Unit		N.m、lbf.in、lbf.ft、kgf.cm										
Operating mode		Peak mode (P) Real-time mode (T) Preset value mode (Pre)										
Battery		2 pcs 1.5V 5 #batteries										
Operating temperature		-10℃ ~ 60℃										
Storage temperature		-20℃ ~ 70℃										
Humidity		Up to 90% non-condensing%										
Fall test height		1 m										
Vibration test condition*2		10G										
Life test*3		10000 times										

NEWJIELI

INTERCHANGEABLE HEAD WIRELESS WIRELESS DIGITAL TORQUE WRENCH

Product Overview

Interchangeable head wireless digital torque wrench is different from ordinary torque wrenches. The ratchet head that comes with it can be replaced with plug-ins such as open head, plum blossom head, and movable open head. It has powerful operating functions, including torque setting: Unit setting: Mode setting; value storage, several floors clear value output and userCorrection function. It is easy to operate, and the requirements for operators are reduced by installing a digital display. It is suitable for bolt fastening and control in the automotive industry, machinery industry, etc.



Features

- Backlight function, clear reading of measurement data
- Can be operated clockwise and counterclockwise(set mode)
- Measurement mode: three measurement modes: real-time mode, peak mode and preset mode
- Has the function of storing and recording values
- It has the function of wireless data transmission.
  ±2% clockwise, ±5% counterclockwise accuracy (20~100% of full scale)
- The buzzer and LED indicate that it will be triggered when the predetermined torque value is reached (peak mode only and pre-
- Four types of engineering units (N.m,kgf.cm , lbf.ft,lbf.in)

Application

A tool dedicated to detecting the tightening and loosening forces of various bolts, screws, and other fasteners.

Functions

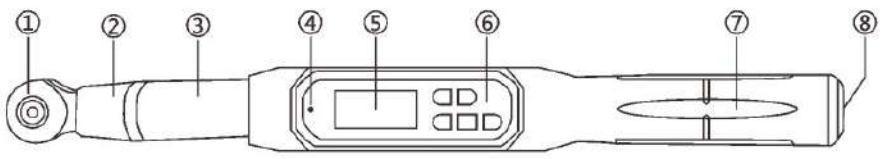

1.Ratchet Torque Wrench (Back Side)
2.Dual-direction ratchet head
3.Shift paddle
4.Indicator light
5.LCD Liquid Crystal Display
6.Function keys
7.Handle
8.Battery cover

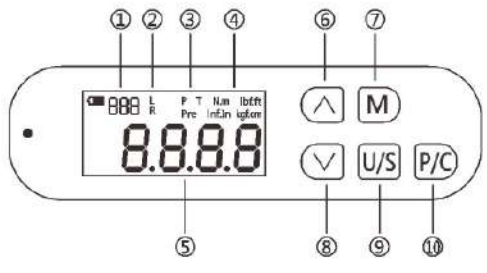

1. Stored value
2. Work direction
3. Operation mode
4. Unit
5. Torque value
6. Up key/Operation mode key
7. Save Key/Storage Data View Key
8. Down key/Predefined value adjustment key
9. Menu/Unit key
10. Power Key/Reset Key

Product Specification

Model	With communication	NWJW-10	NWJW-30A	NWJW-30B	NWJW-60	NWJW-85	NWJW-135A	NWJW-135B	NWJW-200	NWJW-340
Max operating range	N. m	10	30	30	60	85	135	135	200	340
	ft. lb	7.37	22.12	22.12	44.25	62.69	99.57	99.57	147.5	250
	in. lb	88.5	265.5	265.5	531.04	752.31	1195	1195	1770	3009
	kgf. cm	101.97	305.91	305.91	611.82	866.75	1376.61	1376.61	2039.43	3467.03
Min load value (N.m)		0.01						0.1		
Buzzer setting range(N.m)		0.5-10	1.5-30		2-60	4.25-85	6.75-135		10-200	17-340
Length(mm)		390		420				535		655
Connector size(inches)		1/4		3/8				1/2		
Interchangeable connector size		9*12						14*18		
Accuracy		Clockwise: ±2% Counterclockwise: ±2.5%								
Number of rachet head teeth		36								
Rachet head form		Two-way ratchet head								
Unit		N.m、lbf.in、lbf.ft、kgf.cm								
Operating mode		Peak mode (P) Real-time mode (T) Preset value mode (Pre)								
Battery		2 pcs 1.5V 5 #batteries								
Operating temperature		-10℃ ~ 60℃								
Storage temperature		-20℃ ~ 70℃								
Humidity		Up to 90% non-condensing%								
Fall test height		1 m								
Vibration test condition*2		10G								
Life test*3		10000 times								

NEWJIELI

DIGITAL TORQUE WRENCH

Product Overview

Digital torque wrenches differ from conventional torque wrenches, boasting powerful operational functions including torque setting, unit setting, mode setting, value storage, value clearing, value output, and user calibration. They are user-friendly, reducing the skill requirements for operators through the installation of a digital display. They are applicable in the tightening and control of bolts in industries such as the automotive and machinery sectors.



Features

- Can be operated clockwise and counterclockwise
- Peak hold and real-time mode
- Clockwise +2%, counterclockwise +2.5% accuracy (20~100% of the maximum operating
- Buzzer and LCD indication (when the predetermined torque value is reached)
- Four types of engineering units (ft. lb, in. lb, N. m, kgf.cm)
- 100 groups can store recorded values
- Automatic shutdown in 5 minutes

Application

A tool dedicated to detecting the tightening and loosening forces of various bolts, screws, and other fasteners.

Functions

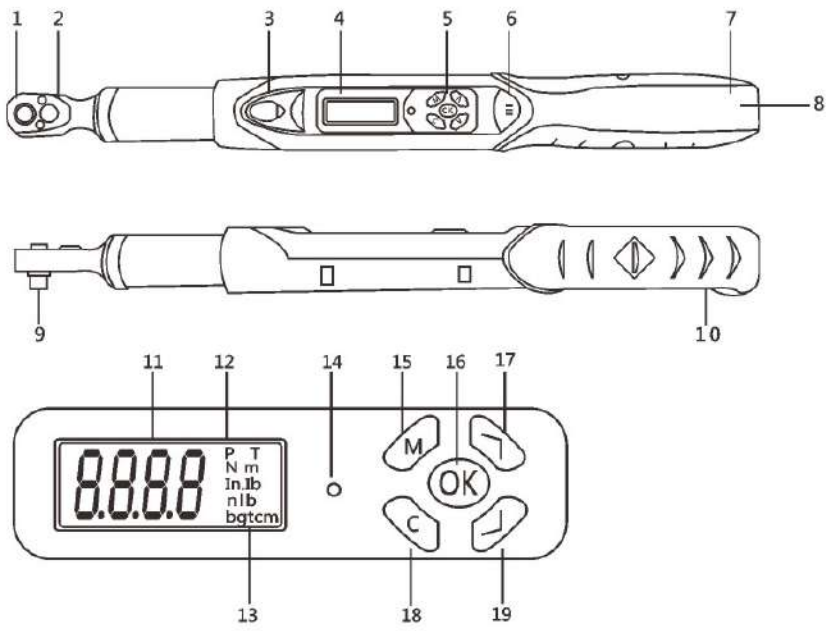

1. Bi-directional ratchet head
2 Shifting paddle
3 Communication Holes
4.LCD screen
5. Button
6. Buzzer
7. Battery case
8. Battery cover
9. Ratchet torque socket
10. Handle
11. Torque value
12.P(peak mode)、T(real-time mode)
13. Units (ft.lb, in.lb, N.m, kgf.cm)
14、LED indicator light
15. Menu button
16. Confirm the key
17. Upward key button
18. Cancel button
19. Press the down button

Product Specification

Model	With communication	NSNB2-10	NSNB2-30	NSNB3-30	NSNB3-60	NSNB3-85	NSNB3-135	NSNB4-135	NSNB4-200	NSNB4-340	NSNB6-500	NSNB6-850
		NSNB2-10R	NSNB2-30R	NSNB3-30R	NSNB3-60R	NSNB3-85R	NSNB3-135R	NSNB4-135R	NSNB4-200R	NSNB4-340R	NSNB6-500R	NSNB6-850R
Max operating range	N. m	10	30	30	60	85	135	135	200	340	500	850
	ft. lb	7.37	22.12	22.12	44.25	62.69	99.57	99.57	147.5	250	368.7	626.8
	in. lb	88.5	265.5	265.5	531.04	752.31	1195	1195	1770	3009	4424	7521
	kgf. cm	101.97	305.91	305.91	611.82	866.75	1376.61	1376.61	2039.43	3467.03	5098.59	8667.58
Buzzer setting range(N.m)		0.5-10	1.5-30		2-60	4.25-85	6.75-135		10-200	17-340	25-500	42.5-850
Connector size(inches)		1/4		3/8				1/2			3/4	
Length(mm)		390		420				535		655	950	1220
Accuracy		Clockwise: ±2% Counterclockwise: ±2.5%									Clockwise: ±2.5% Counterclockwise: ±3.5%	
Number of rachet head teeth		45									24	
Rachet head form		Two-way ratchet head										
Data storage capacity		100										
Unit		N.m、lbf.in、lbf.ft、kgf.cm										
Key number		5										
Operating mode		Peak mode (P) Real-time mode (T) Preset value mode (Pre)										
Battery		2pcs 1.5V Lithium Battery										
Operating temperature		-10℃~ 60℃										
Storage temperature		-20℃~ 70℃										
Humidity		Up to 90% non-condensing%										
Fall test height		1 m										
Vibration test condition*2		10G										
Life test*3		10000 times										

REPLACEABLE HEAD DIGITAL TORQUE WRENCH

Product Overview

Interchangeable digital torque wrench is different from ordinary torque wrenches. Its own ratchet head can be replaced with plug-ins such as open head, plum blossom head, and movable open head. It has powerful operating functions, including torque setting: Unit setting: mode setting; value storage, several floors clear value output and user correctionfunction. It is easy to operate, and the requirements for operators are reduced by installing a digital display. It is suitable for bolt fastening and control in the automotive industry, machinery industry, etc.



Features

- Replaceable head
- Can be operated clockwise and counterclockwise
- Peak hold and real-time mode
- Clockwise +2%, counterclockwise +2.5% accuracy (20~100% of the maximum operating range)
- Buzzer and LCD indication(when the predetermined torque value is reached)
- Four types of engineering units (ft. lb, in. lb, N. m, kgf.cm)
- 100 groups can store recorded values
- Automatic shutdown in 5 minutes

Application

A tool dedicated to detecting the tightening and loosening forces of various bolts, screws, and other fasteners.

Functions

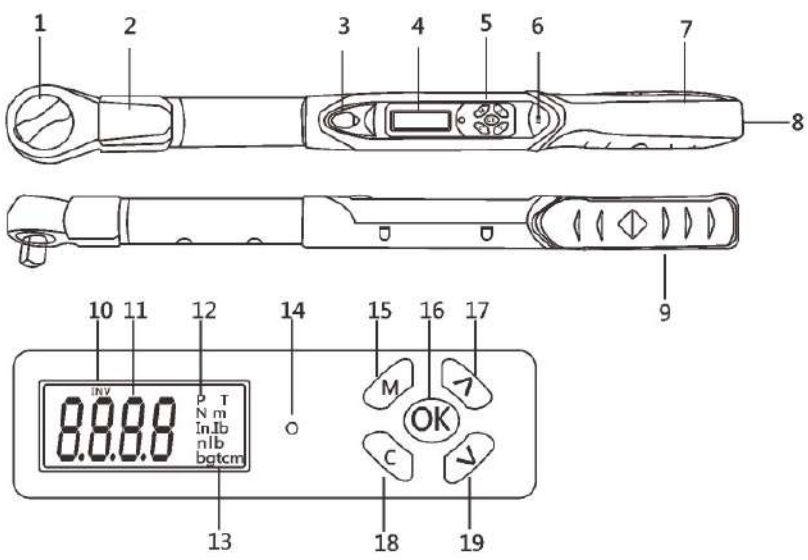

1. Preassembled ratchet head (replaceable)
2. Sensor
3. Communication Port
4. LCD screen
5. Button
6. Buzzer
7. Battery case
8. Battery cover
9. Handle
10. Test Direction
    (No Display: Forward; NIV: Direction)
11. Torque value
12. P (peak mode), T (real-time mode)
13. unit
14. LED indicator light
15 Menu/selection button
16. OK/store button
17. Select up button
18. Power/cancel/zero button
19. Select down button

Product Specification

Model	With communication	NSGC1-10	NSGC1-30	NSGC1-60	NSGC1-85	NSGC1-135	NSGC2-135	NSGC2-200	NSGC2-340
		NSGC1-10R	NSGC1-30R	NSGC1-60R	NSGC1-85R	NSGC1-135R	NSGC2-135R	NSGC2-200R	NSGC2-340R
Max operating range	N. m	10	30	60	85	135	135	200	340
	ft. lb	7.37	22.12	44.25	62.69	99.57	99.57	147.5	250
	in. lb	88.5	265.5	531.04	752.31	1195	1195	1770	3009
	kgf. cm	101.97	305.91	611.82	866.75	1376.61	1376.61	2039.43	3467.03
Min load value (N.m)		0 01 .				0.1			
Buzzer setting range(N.m)		0.5-10	1.5-30	2-60	4.25-86	6.75-135		10-200	17-340
Length(mm)		390		420			535		655
Interchangeable connector size		9*12					14*18		
Accuracy		Clockwise: ±2% Counterclockwise: ±2.5%							
Data storage capacity		100							
Number of rachet head teeth		36							
Rachet head form		Two-way ratchet head							
Unit		N m、lbf in、lbf ft、kgf cm							
Key number		. .5 . .							
Operating mode		Peak mode (P) Real-time mode (T) Preset value mode (Pre)							
Battery		2pcs 1.5V Lithium Battery							
Operating temperature		-10℃ ~ 60℃							
Storage temperature		-20℃ ~ 70℃							
Humidity		Up to 90% non-condensing%							
Fall test height		1 m							
Vibration test condition*2		10G							
Life test*3		10000 times							

NEWJIELI

FOR ANGLED DIGITAL TORQUE WRENCH

Product Overview

NBJS torque wrench with angle digital display is a new type of digital display wrench. It has a powerful operation function, which can directly and accurately read out the torque-angle value, which is simple to use and easy to operate. The requirements for operators are reduced by installing a digital display. It is suitable for bolt fastening and control in the automotive industry, machinery industry, etc.



Features

- Torque-angle value can be read out directly;
- ± 1° (rotate 90° at a speed of 30° /sec) ;
- Can be measured clockwise and counterclockwise;
- Buzzer, LED and vibrator prompt target value;
- Four torque units: N.m,kgf.cm , ft. lbf, in. lbf et al.
- Comes with 3.7V lithium battery, which can be directly charged via USB;
- Comes with 3.7V lithium battery, which can be directly charged via USB;
- Automatic backlight function;

Application

A tool dedicated to detecting the tightening and loosening forces of various bolts, screws, and other fasteners.

Functions

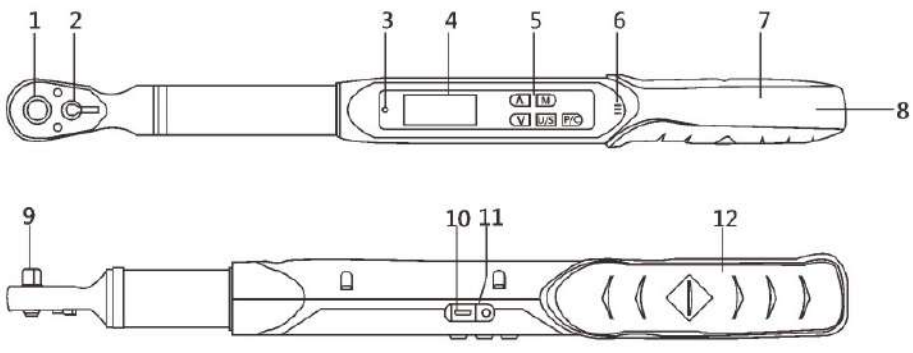

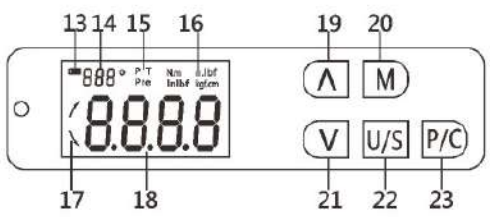

1. Two-way ratchet head
2. Steering picks
3. LED indicator light
4. LCD screen
5. Button
6. Buzzer
7. Battery box
8. Battery cover
9. Ratchet torque square head
10. US lead charging interface
1 1. Charging indicator light
1 2. Grip13. Battery level is low
14. Brightness value display
15. Working mode
16. Unit display
17. Torque direction
1 & Torque value display
19. Press up to set the value to unlock
20 work storage/view buttons
21. Down/working mode switch button
22. Unit switch/menu button
23. Power/zero button

Product Specification

Model	With communication	NBJS2-10	NBJS2-30	NBJS3-30R	NBJS3-60R	NBJS3-85R	NBJS3-135R	NBJS4-135R	NBJS4-200R	NBJS4-340R	NBJS6-500	NBJS6-850R
Max operating range	N. m	10	30	30	60	85	135	135	200	340	500	850
	ft. lb	7.37	22.12	22.12	44.25	62.69	99.57	99.57	147.5	250	368.7	626.8
	in. lb	88.5	265.5	265.5	531.04	752.31	1195	1195	1770	3009	4424	7521
	kgf. cm	101.97	305.91	305.91	611.82	866.75	1376.61	1376.61	2039.43	3467.03	5098.59	8667.58
Min load value (N.m)		0.01					0.1					
Connector size(inches)		1/4		3/8				1/2			3/4	
Length(mm)		390		420				535		655	950	1220
Torque accuracy		±1%										
Angle accuracy		±1 (the accuracy of the angle measurement at a speed of 30° to 90° per second)										
Data storage capacity		255										
Key number		5										
Number of rachet head teeth		45									24	
Rachet head form		Two-way ratchet head										
Unit		N.m、lbf.in、lbf.ft、kgf.cm										
Operating mode		Peak mode (P) Real-time mode (T) Preset value mode (Pre)										
Battery		3.7V Lithium Battery										
Operating temperature		-10℃ ~ 60℃										
Storage temperature		-20℃ ~ 70℃										
Humidity		Up to 90% non-condensing%										
Fall test height		1 m										
Vibration test condition*2		10G										
Life test*3		10000 times										

NEWJIELI

REBAR HEAD DIGITAL TORQUE WRENCH

Product Overview

NGB rebar head digital torque wrench is different from ordinary torque wrenches. It has powerful multi-operation functions, including torque setting: unit setting; mode setting; value storage, value clearing; value output and user correction functions. Easy to operate; the requirements for operators are reduced by installing a digital display. It is widely used in the fastening and control of steel bars in the construction industry.



Features

- Digital display torque reading value
- ± 3% counterclockwise accuracy(20~100% of the maximum operating range)
- Can be operated clockwise and counterclockwise
- Peak hold and real-time mode
- Buzzer and LCD indication(when the predetermined torque value is reached)
- Four types of engineering units (ft. lb, in. lb, N. m, kgf.cm)
- 999 groups can store recorded values
- Automatic shutdown in 5 minutes

Functions

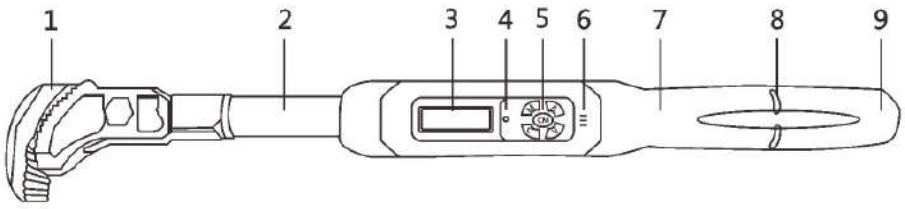

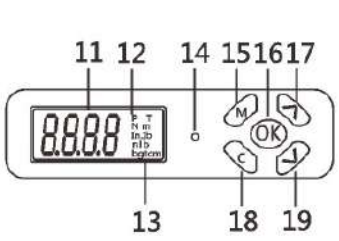

Application

It is specially used to detect the torque of various steel bars; it can effectively ensure the accurate pre-tightening of the fastening torque of the steel bar connection by bridge and construction operators, and it can also ensure the accurate inspection of the fastening torque by construction supervisors.

1. Rebar head
2. Pole
3. LCD Screen
4. LED indicator light
5. Button
6. Handle
7. Battery box
8. Back cover
9. Buzzer
11. Torque value
12. P (peak mode), T (real-time mode)
13. Units (N.m, in. lb, ft. lb, kgf. cm)
14. LED indicator light
15. Menu button
16. Ok button
17. Up button
18. Cancel button
19. Down button

Product Specification

Model	With communication	NGB-C-340	NGB-C-410
Max operating range		340N.m / 1250ft.lb / 3009in.lb / 3467.03kgf.cm	410N.m / 302.58ft.lb / 3628.5in.lb / 4180.85kgf. cm
Min load value (N.m)		0 01	
Connector size(inches)		1/2	
Length(mm)		715	
Accuracy		Clockwise：±3%	
Data storage capacity		. 100	
Number of rachet head teeth		36	
Rachet head form		Rebar head	
Unit		N m、lbf in、lbf ft、kgf cm	
Key number		. . 5 . .	
Operating mode		Peak mode (P) Real-time mode (T) Preset value mode (Pre)	
Battery		2pcs 1.5V 5# batteries	
Operating temperature		-10℃ ~ 60℃	
Storage temperature		-20℃ ~ 70℃	
Humidity		Up to 90% non-condensing%	
Fall test height		1 m	
Vibration test condition*2		10G	
Life test*3		10000 times	

NEWJIELI

ECONOMICAL DIGITAL TORQUE SCREWDRIVER

Product Overview

The digital torque screwdriver is a meticulously designed product for the assembly of and torque testing of small-torque fasteners in the precision manufacturing industry. It is widely used in the fields of instruments, household appliances, mechanical and electrical equipment, automobiles, and motorcycles. It is an essential high-end tool for ensuring precise tightening connections with small and micro torques of bolts and nuts. Compared to mechanical preset screwdrivers, torque control is more accurate.



Features

- Torque value can be read out directly;
- Automatically shut down without operation for 10 minutes to save power;
- Operate clockwise and counterclockwise;
- Freely switch between three operating modes: real-time, peak and preset values;
- Four torque unit options (N.m,ft.lb , lb.in , kgf.cm) ;
- It has the function of storing data in peak mode. Torque direction marker and battery level display.

Product Specification

Model	Measurement range(N.m)	Resolution (N.m)	Precision	Internal hexagonal tenon size (mm)		Weight (Kg)
				(inch)	(mm)	
NSQ-0.5	0.05-0.5	0.0001	±2%	1/4	6.35	0.4
NSQ-2	0.2-2	0.001				
NSQ-4	0.4-4					
NSQ-8	0.8-8					

HIGH END PRESET TORQUE SCREWDRIVER

Product Overview

NGQ torque screwdriver is an upgraded high-end preset torque screwdriver, which is used for thread fastening and tightening workpieces with torque requirements. The product operates counterclockwise, and the torque value can be preset. If the screwdriver is idling beyond the set value, the thread fastening can be prioritized. It is suitable for precision instrument screw locking, circuit board fixing, etc. Where there are high requirements for screw locking and high requirements for locking accuracy.



Product Specification

Model	NGQ-6	NGQ-12	NGQ-30	NGQ-60
Measurementrange (N.m)	0.1-0.6	0.2-1.2	0.5- 3	1-6
Resolution (N.m)	0.01	0.02	0.05	0.1
Dimension	164mm		187mm	
Handle outer diameter (Φ)	35mm		41mm	
Net weight	About 0.3kg		About 0.4kg	
Precision				
Connector size	6.35mm Hexagonal			

Product Overview

The NLTD-K series of spinning preset torque screwdrivers are designed for tightening parts with torque requirements. This product can be operated in both clockwise and counterclockwise directions, allowing for the pre-setting of torque values. Once the set value is exceeded, the screwdriver will spin freely, enabling priority control over the tightening of the threads. It is suitable for applications such as locking screws in precision instruments and securing circuit boards, where there are high requirements for screw locking and high precision in locking.







Product Specification

Model	NLTD-K1.5	NLTD-K3	NLTD-K6	NLTD-K12	NLTD-K30	NLTD-K60
Measurement range (N.m)	0.1-1.5(kgf.cm)	0.2-3.0(kgf.cm)	0.1-0.6(N.m)	0.2-1.2(N.m)	0.5- 3(N.m)	1- 6(N.m)
Resolution (N.m)	0.01(kgf.cm)	0.02(kgf.cm)	0.01(N.m)	0.02(N.m)	0.05(N.m)	0.1(N.m)
Dimension	99mm		161mm		186mm	
Handle outer diameter	17mm		26mm		31mm	
Net weight	About 0.1kg		About 0.3kg		About 0.4kg	
Precison	±5%					
Connector size	3.5mm Circular		6.35mm Hexagonal			

PRESET TORQUE
SCREWDRIVER

Product Overview

Economical preset torque screwdrivers are used for tightening workpieces with torque requirements. This product can be operated in both clockwise and counterclockwise directions, with the ability to preset torque values. The screwdriver will turn freely once the set value is exceeded, allowing for priority control over the tightening of threaded fasteners.

Applicable for tightening screws in precision instruments, fixing circuit boards, and other scenarios where high screw tightening requirements and high locking precision are needed. It is widely used in various electrical, light industry, machinery manufacturing, scientific research, and other industries.



Product Specification

Model	NYQ-6	NYQ-12	NYQ-30	NYQ-60
Measurement range (N.m)	0.1-0.6(N.m)	0.2-1.2(N.m)	0.5-3(N.m)	1-6(N.m)
R esolution (N.m)	0.01(N.m)	0.02(N.m)	0.05(N.m)	0.1(N.m)
Dimension	156mm			
Handle outer diameter (Φ)	39mm			
Net weight	About 0.3kg			
Precision				
Connector size	6.35mmHexagonal			

NEWJIELI

FIXED VALUE TORQUE SCREWDRIVER

Product Overview

The main body of the NNSQ fixed-value torque screwdriver is made of aluminum alloy with anodized surface; the hexagonal socket is made of alloy steel with nickel-plated surface. It has the characteristics of small size, light weight and not easy to rust. It is suitable for the medical industry and other places where the torque value is fixed.



Product Specification

Model	Range(N.m)	Length	Precision	Connect size(mm) (inch)	Radial dimension (mm)	Weight (Kg)
NNSQ-30	0.2-3	128mm	±5%	1/4	Φ26	0.125
NNSQ-60	3-6	143mm			Φ26 Thrust Rod Width 110	0.182

DIGITAL TORQUE METER

Product Overview

The digital torque meter is a torque monitoring instrument supporting ratchet wrenches. It is used for various fastening and disassembly control forces. It has the characteristics of simple operation, light carrying, multi-unit conversion, sound indication, and adjustable forward and reverse. It is widely used in automobiles, bicycles, various mechanical maintenance and other industries.



Product Specification

Model	NQBH-0.5	NQBH-1	NQBH-2
Measurement range (N.m)	0.1-0.5N.m	0.2-1N.m	0.4-2N.m
Resolution(N.m)	0.0001N.m	0.001N.m	
Clamping range(mm)	1-8mm		
Connector size	1/ 4(6.35mm Joint)		
Net weight	About 0.8kg		
Precision	±2%		
Unit	(N.m、lbf.ft、lbf.in、kgf.cm)		

NEWJIELI

ECONOMICAL DIGITAL PUSH PULL FORCE GAUGE

Product Overview

This product is a cost-effective, small and simple thrust and tension testing instrument.



Features

- Digital display, easy to read.
- Light weight, small size, easy to carry
- Unit display: Lb, Kg, and N switch with each other.
- The battery has short circuit, leakage, and overload protection, and the battery has a low battery prompt.
- Powered by a 3.7V lithium battery, it will automatically shut down after ten minutes of no operation at the same time.

Testing Step

- Press the "Power on" button to turn on the power, and use the factory default settings to test directly or select the test mode to test as needed.
- Select the appropriate test joint fixture and install it on the thrust-tension meter (for self-made fixtures, please refer to the relevant data in the "Shape and Installation Dimensions".
- Please hold the push-pull force gauge firmly or install the push-pull force gauge on a suitable testing machineor testing, please make the force under test and the push rod of the push-pull force gauge in a straight line during the test, so that the accurate load value can be measured.
- After the test is completed, remove the load, turn off the power, remove the fixture, clean the objects and put them back in the tool box for next use.

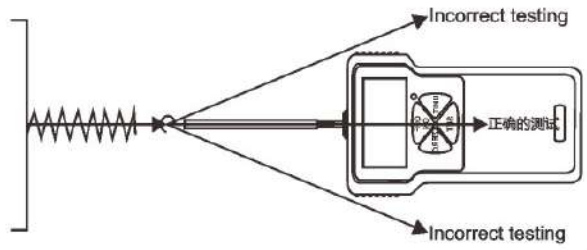

Product Specification

Model	NJT-2	NJT-3	NJT-5	NJT-10	NJT-20	NJT-30	NJT-50	NJT-100	NJT-200	NJT-300	NJT-500
Max load value	2N	3N	5N	10N	20N	30N	50N	100N	200N	300N	500N
	0.2kg	0.3kg	0.5kg	1kg	2kg	3kg	5kg	10kg	20kg	30kg	50kg
	0.45lb	0.65lb	1.1lb	2.2lb	4.5lb	6.5lb	11lb	22lb	45lb	65lb	110lb
Load value	0.001N			0.01N				0.1N			
	0.001kg			0.001kg				0.01kg			
	0.001lb			0.001lb				0.01lb			
Sensor structure	Built-in										
Precision	±0.5%										
Power	3.7V lithium battery										
Charging time	4~ 6 hours										
Continuous battery life	About15 hours										
Battery life	⩾ 30 times										
Charger	Input : AC 220V 50HZ Output : DC 5V 1000mA										
Work temperature	5℃ ~ 35℃										
Transport temperature	– 10℃ ~ 60℃										
Relative humidity	15%~80%RH										
Work environment	Source and corrosive medium										

NEWJIELI

DIGITAL PUSH PULL FORCE GAUGE

Product Overview

The digital force gauge is a compact, user-friendly device for tension and pressure testing, featuring easy readings, high accuracy, ease of operation, and portability. It allows for seamless switching between Newton, kilogram, and pound units, with the ability to flip displayed numbers up and down. It also includes a peak load (PEAK) function. It is widely used in various industries such as electronics, high and low voltage electrical appliances, hardware locks, automotive parts, adhesives and chemicals, lighters and ignition devices, pens, light industry, construction, textiles, machinery, and research institutions for pull and pressure load tests, plug-in force tests, and destructive tests. Before using this instrument, please thoroughly read the manual to fully utilize its functions and ensure accurate measurement results.



Features

- Compact in size and simple in operation, it can be hand-held or installed with various test benches
- Easy to use, combined with various fixtures for testing;
- The digital display direction can be flipped up and down, and the large font is displayed for easy reading;
- High test accuracy;
- Continuous load indication and peak holding function, free switching function;
- The 3 units of Newton, kilogram and pound can be switched at any time.
- The sensitivity of the button of this instrument is set to 1 second, and it is possible to press the button quickly.
- There will be no response. Please pause slightly when you press the button-next,
- Ensure the normal operation of the button function.

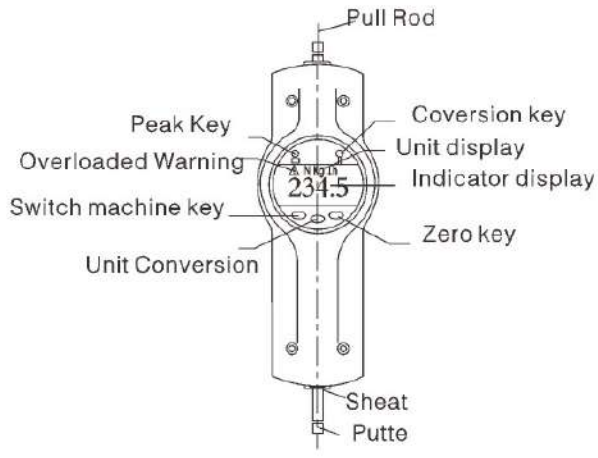

Function Key Display

- Peak key: controls the transition between real-time load and peak load states.
- Translation:
- Toggle key: controls the upward and downward adjustments of displayed numbers. It facilitates customers to read values in a straightforward manner.
- Power button: Controls the power on and off of the instrument. This instrument is set to automatically turn off after 5 minutes of non-use.
- Unit conversion key: Press this key to perform unit conversion for measurement. It cycles through displaying N (newtons), kg (kilograms), and lb (pounds)
- In the testing data display state, unit conversion of the same value can also be completed.
- Overload Alert: Exceeds the measurement range of this instrument, a triangle symbol will appear in the upper left corner of the display. Please note to avoid damage.

Product Specification

Model	NSZT-10	NSZT-20	NSZT-30	NSZT-50	NSZT-100	NSZT-200	NSZT-300	NSZT-500
Max Load Value	10N	20N	30N	50N	100N	200N	300N	500N
	1KG	2KG	3KG	5KG	10KG	20KG	30KG	50KG
	2.2lb	4.5lb	6.5lb	11lb	22lb	45lb	65lb	110lb
Load division value	When the measured value is below 100 (with 2 decimal places or less), the load division value is 0.01.							
	When the indicated value exceeds 100 (with three decimal places), the load division value is 0.1;							
Accuracy	1%							
Push Rod Stroke	10mm							
Power Supply	3V Button Battery							
Battery Life	6 months							
Operatin temperature	5 ℃~35℃							
Transport Temperature	-10 ℃~60℃							
Relative Humidity	1 5 %~80%RH							
Weight	0.68kg							

POINTER TYPE PUSH PULL FORCE GAUGE

Product Overview

A handheld product with compact size and simple operation, and can be installed on various test benches and used in combination with various fixtures.



Features

- Compact and easy-to-operate handheld product that can be installed on various test stands, making it convenient for testing various types of products with different fixtures
- Pointer indication, convenient reading and high testing accuracy; Continuous load indication and peak hold free switching function;
- Unit: N.m/ Kg.

Product Specification

Model	NZT-10	NZT-20	NZT-30	NZT-50	NZT-100	NZT-200	NZT-300	NZT-500
Max load value	10N	20N	30N	50N	100N	200N	300N	500N
	1KG	2KG	3KG	5KG	10KG	20KG	30KG	50KG
Load division value	0.05N	0.1N	0.2N	0.25N	0.5N	1.0N	2.0N	2.5N
	10g	20g	30g	50g	100g	200g	300g	500g
Pull-push travel	10mm							
Dimensions	260*66*36mm							

NEWJIELI

DIGITAL PUSH PULL FORCE GAUGE

Product Overview

NST series digital display push-pull force meter is a kind of push-pull load testing instrument with high digital display resolution and easy to use. It is suitable for push-pull load testing, plug-in force testing, destructive testing, etc. of various products.







Features

- High precision and high resolution: accuracy of 0.5 level, minimum reading of 0.001N;
  6 measurement modes: standard test mode, push-pull peak mode, thrust peak mode, tension peak mode, external node on-off mode, external power-saving on-off mode;
- Maximize test efficiency;
- Three display methods are available: real-time, peak, and automatic peak;
- Three kinds of unit conversion: N, kg, lb;
- Peak holding function: Can capture the peak during the test;
- Comparison function:. The upper and lower limit deviations are freely set, the LCD screen is displayed with "MAX" and "MIN" respectively, and the buzzer automatically alarms;
- Signal output function: You can set the comparison value, when the measured force value is greater than the comparison value, the output signal;
- Automatic peak function: Keep the peak displayed for 2 seconds and automatically release it;
- Automatic shutdown function: Automatic shutdown without operation for 10 minutes;
- Calculation function: Connect to a computer, which can automatically calculate the maximum and minimum values of each test, etc.;
- LCD screen can be flipped to display: press the "Print" button to flip the display 180 degrees;
- Real-time analysis function: It can be connected to a computer, and the test curve can be displayed synchronously on the computer for various types of analysis during the test.

Product Specification

Model	NSH-2	NSH-3	NSH-5	NSH-10	NSH-20	NSH-30	NSH-50	NSH-100	NSH-200	NSH-300	NSH-500	NSH-1000	NSH-2000	NSH-3000	NSH-5000	NSH-10K	NSH-20K	NSH-30K	NSH-50	NSH-100K	NSH-200K	NSH-300K	NSH-500K	NSH-1000K	NSH-2000K	NSH-3000K
Max Load Value	2N	3N	5N	10N	20N	30N	50N	100N	200N	300N	500N	1000N	2000N	3000N	5000N	10KN	20KN	30KN	50KN	100KN	200KN	300KN	500KN	1000KN	2000KN	3000KN
Load Division Value	0.001N			0.01N				0.1N				1N				0.01KN				0.1KN				1KN		
Sensor Structure	High-precision sensor (built-in)											S-type high-precision sensor (external type)								Cylindrical or spoke type (external type)					Flange type (external type)	
Precision	± 0.5%														± 1%											
Power	3.7V lithium battery																									
Charger time	4~ 6 hours																									
Continuous battery life	About 10 hours																									
Battery life	⩾ 300 times																									
Charger	Input : AC 220V 50HZ Output : DC 5V 1000mA																									

NEWJIELI

POINTER TENSIONMETER

Product Overview

Thise series economic tensiometer is applicable to the contact pressure of relay contacts, electronic switches, micro – switches, valves, spring tension pressure, the spindle pressure of dial measuring instruments, the contact and armature pressure of automatic telephone equipment, the pressure of buffer devices in tape recorders, and other contact point pressures, as well as other precise pressure and tension tests.



Product Specification

Model	NSEN								NSEG							
	NSEN –0.05	SEN –0.1	NSEN –0.3	NSEN –0.5	NSEN –1	NSEN –1.5	NSEN –3	NSEN –5	NSEG –5	NSEG –10	NSEG –30	NSEG –50	NSEG –100	NSEG –150	NSEG –300	NSEG –500
Max measurement	0.05N	0.1N	0.3N	0.5N	1N	1.5N	3N	5N	5g	10g	30g	50g	100g	150g	300g	500g
Load value	0.002N	0.005N	0.01N	0.02N	0.05N	0.05N	0.1N	0.2N	0.2g	0.5g	1g	2g	5g	5g	10g	20g
Scale style	0.01~	0.02~	0.06~	0.1~	0.2~	0.3~	0.6~	1~	1~	2~	6~	10~	20~	30~	60~	100~
	0.05~	0.1~	0.3~	0.5~	1~	1.5~	3.0~	5~	5~	10~	30~	50~	100~	150~	300~	500~
	0.01N	0.02N	0.06N	0.1N	0.2N	0.3N	6N	1N	g	2g	6g	10g	20g	30g	60g	100g

TEXTILE TENSIONMETER

Product Overview

Textile tensiometer is a measuring instrument dedicated to measuring the tension of silk threads in the textile industry. At the same time, it can also measure fine metal wires. Using the principle of pulley block, the guide wheel is a precision bearing with very little resistance, making the measurement results more accurate.



Product Specification

Model	NFZ–25	NFZ–50	NFZ–75	NFZ–100	NFZ–150	NFZ–250
Measurement range	25–2–25	50–4–50	75–5–75	100–10–100	150–10–150	250–20–250
Min scale value(gw)	1	2	5			10
Precision	± 1Vscale					
Weight	Net weight 86g, Gross weight 136g					

NEWJIELI

DIGITAL TENSIONMETER

Product Overview

Digital display tensiometer is a universal portable low-power tension testing instrument with the characteristics of small size, light weight, easy to carry and wide range of use, high precision, etc., suitable for relays, contact pressure, electronic switches, miniature automatic telephone equipment contact and armature pressure and other mechanical pressures.



NTL Round head



NTL Tooth



NTL-J Nose tip

Features

- Portability: Lightweight, small, easy to carry, and can be operated with one hand.
- Digital display: Equipped with LCD display, easy to read.
- Unit switching: Supports five units (N, Kg, Lb, Oz, g), which can be switched between each other.
- Auto shutdown: Automatically shut down when no operation is performed to save power.
- Ultra-low standby power consumption: Long-term use.
- Durability: Can be used continuously for more than 100,000 times.

Product Specification

Model	NTL-1	NTL-2	NTL-3	NTL-5	NTL-10	NTL-20
Max load value	1N	2N	3N	5N	10N	20N
	0.1kg	0.2kg	0.3kg	0.5kg	1kg	2kg
	0.21lb	0.41lb	0.62lb	1.03lb	2.07lb	4.14lb
	3.6Oz	7.2Oz	10.8Oz	18Oz	36Oz	72Oz
	100g	200g	300g	500g	1000g	2000g
Load division value	0.001N				0.01N	
	0.0001kg				0.001kg	
	0.0001lb				0.001lb	
	0.001Oz				0.01Oz	
	0.1K				1K	
Precision	±0.5%					
Work current	30mA					
Power	AAA battery*4					
Using time	100 hours					
Dimension	⩾ 128*66*28mm					
Net weight	145g(include batteries)					

NEWJIELI

LATERAL PRESSURE TENSIONMETER

Product Overview

NHD type side pressure tension tester is easy to install, simple to operate, easy to maintain, and is dedicated to measuring the tension of wire ropes. The wire rope is fixed to the sensor by U-shaped bolts. When the wire rope is pulled, the force acts on the sensor through the support block.



Product Specification

Model	Wire ropediameter (mm)	A(mm)	B(mm)	C(mm)	Precision
NHD-1t	Φ6~Φ14	160	30	60	±5%
NHD-2t	Φ8~Φ18	160	30	60	±5%
NHD-5t	Φ16~Φ26	180	34	68	±5%
NHD-10t	Φ24~Φ36	200	40	80	±5%
NHD-20t	Φ24~Φ36	240	46	90	±5%

HANDHELD DIGITAL TENSIONMETER

Product Overview

A handheld digital force gauge is a portable electronic measuring instrument that can measure the tension of filamentous and linear materials. It is widely used in industries such as wire cables, textiles, fibers, metals, and carbon fibers. It can accurately measure tension and systematically handle data.



Features

- Three working modes – real – time, hold, and peak – can be switched arbitrarily.
- Six units including cN, gf, OZ, Kgf, N, and lb can be set.
- The accuracy is 2.5% of the full scale. It can accurately measure the tension of 10 different materials.
- It has a USB communication function and a thickness adjustment function.
- Data storage is easy, with 41 groups of data being storable.

Product Specification

Model	NSZ-200	NSZ-500	NSZ-1000	NSZ-2000	NSZ-2500	NSZ-5000	NSZ-10K
Measurement range	4~200.0(cN)	10~500(cN)	20~1000(cN)	40~2000(cN)	50~2500(cN)	100~5000(cN)	2.00~10.00(daN)
Measuring head width (mm)	65	65	65	65	116	116	116
Textile PA monofilament	Φ0.12mm	Φ0.12~0.20mm	Φ0.20~0.40mm	Φ0.40~0.70mm	Φ0.40~0.70mm	Φ0.60~1.20mm	Φ0.80~1.40mm
Dimension (mm)	270*80*55			270*118*55			
Net weight(g)	About 640g						
Power	3.7V lithium battery *2						
Resolution	1cN			0.1N			

NEWJIELI

HIGH SPEED RAIL DIGITAL TENSION GAUGE

Product Overview

The NGZ series rope tension meter is an instrument for online measurement of cable tension in power cables, optical fibers, and ropes. It is suitable for use in various industries including high-speed rail, power, communication, transportation, construction, amusement parks, and any context involving measurement of copper wire tension. It is also applicable in settings such as major research institutions and testing agencies.



Features

- Online measurement: There is no need to disassemble the rope when measuring it. The rope with tension can be measured online, loaded in real time and the rope tension can be observed online.
- Portable: The instrument adopts a high-strength aluminum alloy structure, which is light in weight, small in size and easy to carry.
- Easy to operate: The instrument loading mechanism adopts a lever structure, and the rope tension can be measured correctly only by pushing the instrument handle to the end; the operation is simple.
- The performance of the instrument is stable and the measurement accuracy is high. When the specifications of the rope under test are consistent with the rope number stored in the dynamometer, the measurement accuracy can reach 5% within the quantifiable range.
- The instrument has built-in 3 kinds of preset specifications of ropes, and only need to select the corresponding rope number when measuring.
- The digital display displays the force value, and the instrument uses LCD to display the measured force value, making it more convenient to read.
- Three kinds of unit switching: The instrument can switch the three force values of N, Kgf and lbf.
- The instrument can save 383 sets of measurement data, and the saved data can be exported through a computer.

Product Specification

- Tension value：5000N
- Resolution: 1N
- Precision: ± 5%
- PowerNiMH 7.2V Battery Packs
- Charger:InputAC100~240V 50Hz
- Output:DC12V 500mA
- Sampling frequency: 10Hz

Product Specification

Model	NGZ-A-5000G	NGZ-A-5000S	NGZ-B-5000G	NGZ-B-5000S	NGZ-C-5000G	NGZ-C-5000S
Traction index	Line diameter (mm)		Line diameter (mm)		Line diameter (mm)	
Tested object	Copper stranded wire	Wire rope	Copper stranded wire	Wire rope	Copper stranded wire	Wire rope
1	Φ7.5	Φ6	Φ10.5	Φ10	Φ12.5	Φ11
2	Φ9	Φ8	Φ12.5	Φ11	Φ14	Φ13
3	Φ10.5	Φ10	Φ14	Φ13	Φ16	Φ16

NEWJIELI

ELEVATOR ROPE TENSIONMETER

Product Overview

Elevator rope tensiometers are mainly used for tension testing of elevator traction wire ropes. In the process of elevator installation, acceptance and annual inspection, the tension of each traction wire rope is tested and adjusted to make its tension as consistent as possible, thereby extending the service life of the traction wheel and making the elevator wire rope run more smoothly. This tensiometer can also be used for bridge slings, tower wiring, overhead wires, index wire ropes and other tests involving steel cable tension.



Product Specification

Model	NDZ-3000	NDZ-5000
Range	3000N	5000N
Resolution	1N	1N
Precision	≤ ±5%	
Measurement range	10%~90%	
Loading method	Manual	
Battery	7.2V 1.2* 6 Nickel-metal hydride rechargeable battery pack	
Dimension	434*92*126(mm)	
Weight	About 1.40kg	
Test diameter	Φ6、Φ8、Φ10、Φ11、Φ13、Φ16	

ROPE TENSION TESTER

Product Overview

The NSZ type rope tension gauge is applicable in the power industry, communication industry, transportation industry, glass curtain wall decoration industry, aerial cableway industry, construction industry, amusement places, tunnel construction, fisheries fishing, and major research institutes, educational institutions, testing institutions, and scenarios involving rope and steel wire tension. The utility model patent number is: ZL201020049317.1



Product Specification

Model	NSZ-20(2T)	NSZ-50(5T)	NSZ-100(10T)	NSZ-200(20T)
Max load value(KN)	20	50	100	200
Load division value(KN)	0.01	0.01	0.1	0.1
Measurement diameter	Φ6~Φ18(mm)	Φ12~Φ16(mm)	Φ20~Φ34(mm)	Φ26~Φ40(mm)
Output interface	RS232 nine-hole socket			
Power	Rechargeable battery charger (charging voltage 100V ~ 240V)			
Work temperature	5 ℃~35℃			
Transport temperature	– 10 ℃~ 60℃			
Relative humidity	15%~ 80%RH			
Work environment	No vibration source and corrosive medium around			
Net weight	4.7kg		7kg	
Dimension	650 X 375 X 100(mm)			
Precision	3%~6% of the maximum function (depending on the characteristics of rope formation)			

NEWJIELI

ECONOMICAL DIGITAL TORQUE METER

Product Overview

The digital torque meter is a torque monitoring instrument supporting ratchet wrenches. It is used for various fastening and disassembly control forces. It has the characteristics of simple operation, light carrying, multi-unit conversion, sound indication, and adjustable forward and reverse. It is widely used in automobiles, bicycles, various mechanical maintenance and other industries.



Product Specification

Model	NNB-30	NNB-135	NNB-200
Range(N.m)	3-30N.m	13.5-135N.m	20-200N.m
Division (N.m)	0.01N.m	0.1N.m	
Connector size	1/4 3/8 1/2		
Net weight	About 0.18kg		
Precision	Clockwise ±2% ; Counterclockwise ±2.5%		
Unit	(N.m、lbf.ft、lbf.in、kgf.cm)		

DIGITAL TORQUE TESTER

Product Overview

The NST series digital torque tester is a smart, multifunctional measurement instrument designed and manufactured to test and inspect various torque levels. It is primarily used for the testing and calibration of various electric and pneumatic screwdrivers, torque screwdrivers, and torque wrenches. This instrument is applicable for the printtesting of tightening forces in various products and destructive torque tests on parts. It is available in versions with and without a printer



Product Specification

Model																	
	No-printer	NST -0.5	NST -1	NST -2	NST -3	NST -5	NST -10	NST -20	NST -50	NST -100	NST -200	NST -300	NST -500	NST -1000	NST -2000	NST -3000	NST -5000
	With printer	NST -0.5P	NST -1P	NST -2P	NST -3P	NST -5P	NST -10P	NST -20P	NST -50P	NST -100P	NST -200P	NST -300P	NST -500	NST -1000P	NST -2000P	NST -3000P	NST -5000P
Measurement range	N.m	500/0.01m	1000/0.001	2.000/0.001	3.000/0.001	5.000/0.001	10.00/0.01	20.00/0.01	50.00/0.01	100.0/0.1	200.0/0.1	300.0/0.1	500.0/0.1	1000/1	2000/1	3000/1	5000/1
	kgf.cm	5105.2/0.1	10.20/0.01	20.4010.01	30.6/0.01	5.00.01	102.0/0.1	204.0/0.1	510./0.1	1020/1	2040/1	060/1	5100/1	10210/1	20420/1	30630/1	51051/1
	lb.in	4431.1/01m	8.85/0.01	17.70/0.01	26.550.01	44.25/0.01	88.5/0.1	177.0/0.1	442.5/0.1	885/1	1770/1	2655/1	4425/1	8862/1	17725/1	26587/1	44312/1
Sensor structure									Sensor outside								
Acuuracy		± 1%															
Peak sampling frequency		1920HZ															
Battery		7.2v 1.2v*6 Nickel-metal hydride battery pack															
Charge time		4-6 hours															
Continuous battery time		About 10 hours															
Battery life		≥300 times															
Body size		With printer type: 350mm*190mm*180mm															
		Without printer type: 123mm*230mm*65mm															
Power adapter		Input: AC 220V 50HZ output: DC 12V 500mA															
Net weight		2kg					34kg						6.5kg				

NEWJIELI

PORTABLE TORQUE METER

Product Overview

The NNSJ portable torque tester is a quality control device used for calibrating torque sensors, as well as testing the torque in power system transmissions, tightening torques of bolts, and other fastening components. It is characterized by its ease of operation, high accuracy, and portability, and is widely applied in various industries including electrical, light industry, mechanical manufacturing, and research institutions.



Product Specification

Model	NNSJ-5	NNSJ-50	NNSJ-220	NNSJ-550	NNSJ-2200
Measurement range(N.m)	0.500~5.00	5.00~50.00	22.0~220.0	55.0~550.0	220~2200
Precisoin	± 1%				
Data storage capacity	2000 sets				
Connector size	1/4	3/8	1/2	3/4	1
Transport function	USB cable				
Operating mode	PEAK)/ Real-time / Max peak				
Unit	N.m、lbf.in、kgf.cm				
Operating temperature	5 ℃~40℃				
Storage temperature	– 20℃ ~70℃				
Humidity	Up to 90% non-condensing%				
Power	72V Nickel-hydrogen battery				
Weight (Kg)	0.7	1.4	1.48	4.7	5.0

ECONOMICAL TORQUE TESTER

Product Overview

NST-B torque tester is a precision measuring instrument used to detect, test and calibrate various torques. It is used to detect and correct the torque of various electric screwdrivers, torque wrenches, and valves. Various products involve tightening force testing, destructive testing of parts, etc. It is widely used in electrical manufacturing, machinery manufacturing, automobile light industry, professional scientific research and testing industries.



Product Specification

Model		NST-B-1	NST-B-2	NST-B-5	NST-B-10	NST-B-20
Resolution Measurement Range	N.m	0.1000~1.0000	0.200~2.000	0.500~5.000	1.000~10.000	2.00~20.00
	kgf.cm	1.0197~10.197	2.039~20.39	5.098~50.98	10.197~101.97	20.39~203.9
	ft.in	0.07375~0.7375	0.1475~1.475	0.3687~3.687	0.7375~7.375	1.475~14.75
	in.lb	0.8850~8.850	1.770~17.70	4425~44.25	8.850~88.50	17.70~177.0
Precision		± 1%				
Transport mode		USB cable				
Operating mode		First peak/ Real-time / Max peak				
Unit		N.m、ft.in、In.lb、kgf.cm				
Operating temperature		5 ℃-40℃				
Storage temperature		-20 ℃-70℃				
Humidity		Up to 90% non-condensing%				
Battery		7.4V Nickel-hydrogen battery				
Weight (Kg)		1.58				

NEWJIELI

AUTOMATIC BOTTLE CAP TORQUE TESTER

Product Overview

NZPJ is a new patented product designed for automatic testing of torque values. It combines advanced electronic technology with precise mechanical transmission principles. This innovation replaces the errors that come with manually opening or tightening bottle caps to test torque values. It meets the technical requirements set by the national standard GB/T 17876. It is equipped with high-precision torque sensors, enabling accurate loading and positioning. It is suitable for testing the torque values of various types of bottles, caps, and tubes used in packaging products, such as pharmaceutical glass bottles, child safety caps, beverage bottles, mineral water bottles, baby bottles, oil drums, etc. It is the preferred choice for quality control in the beverage, bottle manufacturing industries, research institutions, inspection agencies, and large enterprises..



Testing Step

- Fix the bottle body and bottle cap of the measured object to the fixture equipped with the tester separately, and clamp them.
- The bottom clamp is connected to the torque sensor in the tester box.
- After starting the instrument, the upper end clamp clamps the bottle cap and starts to rotate, driving the bottle body, thereby transmitting it to the torque sensor, and testing the torque value required for the bottle cap to rotate clockwise or counterclockwise.

Features

- Measure the torque value (tightness value), angle value, clockwise and counterclockwise measurement of the cap, etc. Of the bottle cap.
- Three torque units: N.m,Kgf.cm ,in.lbf.
- Accuracy: Angle accuracy: 1° /100° (unit:deg); torque accuracy: ± 1%
- Voltage: Input AC220V/AC110V.
- Comes with RS232 interface, can be connected to a computer for use. Host computer control and real-time curve.
- Four measurement modes: manual mode, automatic peak mode, repeat mode, torque angle modulus.
- Operating speed: 3-90deg/s.
- Overload protection, the protection force value is 120 of the full scale%

Product Specification

Model		NZPJ-1	NZPJ-2	NZPJ-3	NZPJ-5	NZPJ-10
Measurement Range Resolution	N.m	1.000/0.001	2.000/0.001	3.000/0.001	5.000/0.001	10.00/0.01
	kgf.cm	10.20/0.01	20.40/0.01	30.60/0.01	51.00/0.01	102.0/0.1
	lbf.in	8.85/0.01	17.70/0.01	26.55/0.01	44.25/0.01	88.5/0.1
Range (N.m)		1N.m	2N.m	3N.m	5N.m	10N.m
Precision		± 1%				
Angle precision		1° / 100°				
Clamping range		18mm- 146mm (small cample 6mm-60mm)				
Automatic tightening speed		3-90deg/s(Adjustable)				
Operating temperature		0 ℃~35℃				
Storage temperature		-20 ℃~70℃				
Humidity		No condensation can reach 80%				
Dimension		440* 255*1050mm				
Net weight		About 32kg				
Power		AC 220V 50Hz or AC 110V				

NEWJIELI

DIGITAL BATTLE CAP TORQUE METER

Product Overview

The cap torque tester is an intelligent multifunctional measuring instrument designed and manufactured to test and detect various torque caps. It is mainly used to detect and correct the tightening force, torsional destructive testing of parts, etc. It has the characteristics of simple operation, high precision, full function, and easy to carry. It is widely used in various electrical, light industry, machinery manufacturing, scientific research institutions and other industries.



Product Specification

Model	With printer	NSPJ-1B	NSPJ-2B	NSPJ-3B	NSPJ-5B	NSPJ-10B	NSPJ-20B
	No printer	NSPJ-1BP	NSPJ-2BP	NSPJ-3BP	NSPJ-5BP	NSPJ-10BP	NSPJ-20BP
Range Resolution	N.m	1/0.0001	2/0.0001	3/0.0001	5/0.0001	10/0.001	20/0.001
	kgf.cm	10.21/0.001	20.42/0.001	30.631/0.001	51.052/0.001	102.1/0.01	204.2/0.01
	lbf.in	8.862/0.001	17.724/0.001	26.586/0.001	44.31/0.001	88.62/0.01	177.24/0.01
Precision		± 1%					
Clamping range		Square plate /Round plate 21-145(mm)					
Battery		7.2V1.2V*6 Nickel-hydrogen battery pack					
Charge time		4~6 hours					
Continuous battery life		About 10 hours					
Battery life		≥ 300 time					
Dimension		400*200*200mm					
Net weight		No printer≈ 8kg ;With priter≈ 9kg					
Power		Input :AC220V50HZ Output :DC12V500mA					

TORQUE SCREWDRIVER CALIBRATION INSTRUMENT

Product Overview

The NNQH Torque Wrench Calibrator is an intelligent measurement instrument designed to detect various torques. It is primarily used for setting torque on various electric and pneumatic screwdrivers, torque screwdrivers, torque wrenches, and for testing and calibrating these products, as well as for destructive testing of components. It is widely applied in electrical manufacturing, mechanical manufacturing, automotive light industry, professional research, and testing industries.



Product Specification

Model	NNQH-2	NNQH-10
Maximum	2N.m	10N.m
	0.2kgf.cm	1kgf.cm
	0.45lbf.in	2.2lbf.in
Min resolution	0.0001	0.001
Precision	± 1%	
Power	Input :AC 220V or 110V Output :DC 12V	
Work temperature	5℃ ~35℃	
Transport temperature	10℃ ~60℃	
Data storage	999 set	
Net weight	14.5 Kg	
Dimension	220*234*225 mm	

Features

- Mechanical loading feature eliminates individual measurement errors due to variations in operator' s speed or force, as the torque wrench can be securely fixed by the loading device, minimizing the range of individual errors.
- The torque wrench can be firmly secured by the loading device, thus minimizing the scope of individual measurement errors.

NEWJIELI

TORQUE SCREWDRIVER CALIBRATOR

Product Overview

The NNQJ series torque screw tester is a smart, multifunctional measurement instrument designed for testing and inspection of various torque screws. It features easy operation, high accuracy, comprehensive functions, and ease of portability.



Testing

- Adjust the torque value of the detected preset torque screwdriver to the preset value.
- Shake the upper wheel to adjust to the appropriate height, and put the top of the screwdriver in. In the upper connector
- Shake the lower handwheel to adjust the lower connector to a suitable angle, put the bottom end of the screwdriver in, and fix it.
- Turn on the power and select the unit and measurement mode as needed. (Under normal circumstances, select the peak measurement mode)
- Turn the handwheel clockwise and apply a force value. The value displayed on the instrument screen is the measured torque value.

Features

- Features high accuracy, high resolution, fast sampling, and full-screen display.
- Utilizes a high-precision torque sensor with directional torque display.
- Features adjustable upper and lower limit settings with red and green indicator lights and an audible piezo alarm for alerts.
- Offers unit conversion among N.m, kgf.cm, and lb.in for user selection.
- Allows switching between real-time, peak, and auto-peak modes.
- Communicates with PC via USB interface for synchronous testing, displaying force curve graphs and detailed test records on the computer, which can be saved, printed, and analyzed.
- Includes peak hold and automatic release functions with customizable release time.
- Boasts large storage capacity, capable of saving up to 999 test datasets.
- Equipped with an automatic shutdown feature that can be set for inactivity.

Product Specification

Model		NNQJ-2	NNQJ-5	NNQJ-10	NNQJ-20
Range Resolution	N.m	2.000/0.001	5.000/0.001	10.00/0.01	20.00/0.01
	kgf.cm	20.40/0.01	51.00/0.01	102.0/0.1	204.0/0.1
	lbf.in	17. 70/0.01	44.25/0.01	88.5/0.1	177.0/0.1
Precision		± 1%			
Peak sampling frequency		1920Hz			
Power		7.2V 1.2V*6 Nickel-hydrogen battery pack			
Charge time		4~6 hours			
Continuous battery life		About 10 hours			
Battery life		⩾ 300 times			
Dimension		260mm X 300mm X 620mm			
Net weiight		32KG			
Charger		Input : AC 220V 50HZ Output : DC 12V 1000m			

NEWJIELI

DIGITAL TORQUE WRENCH TESTER

Product Overview

The NBJ torque wrench calibrator is a specialized equipment used for calibrating torque wrenches and torque screwdrivers. It is primarily utilized for testing various types of torque wrenches, digital torque wrenches, preset torque wrenches, torque screwdrivers, screwdrivers, and various instruments and products that involve tightening force. It is widely applied in the electrical manufacturing, mechanical manufacturing, automotive light industry, and professional research and testing sectors.



Features

- High precision, high stability, high resolution;
- The upper and lower limits can be set, with sound and light alarm device;
- Dot matrix LCD display, backlight can be set;
- Torque direction recognition;
- Three kinds of units N. m, kgf. cm, lb. in automatic conversion;
- Multiple peak retention;
- Power level display and low battery prompt;
- Automatic shutdown without operation, shutdown time can be set;
- Store and print 255 sets of test data, which can be cleared arbitrarily;
- Using the USB interface to connect to the PC, the curve can be detected and measured in real time, and the data can be processed: such as printing, statistics, etc.

Product Specification

Model		NBJ-30	NBJ-50	NBJ-100	NBJ-200	NBJ-300	NBJ-500	NBJ-1000	NBJ-2000	NBJ-3000
Measuring range Resolution	N.m	30.00/0.001	50/0.001	1000/0.1	200.0/0.01	300/0.01	500/0.01	1000/0.1	2000/0.1	3000/0.1
	kgf.cm	306.31/0.01	510.52/0.01	1021/0.1	2042.0/0.1	3063/0.1	5105.2/0.1	10210/1	20420/1	30630/0.1
	lb.in	265.86/0.01	443.11/0.01	886.2/0.1	1772.4/0.1	2658.6/0.1	4431.1/0.1	88622/1	17725/1	26586/0.1
Dimensions		645*420*220mm		1050*540*300mm				1433*685*360mm		
Inspected length range		150mm~450mm		150mm~870mm				150mm~1200m		
Rotation angle		210mm		330mm				450mm		
High stroke		90mm		140mm						
Precision		±1%								
Peak sampling frequency		2000HZ								
Charging time		4~6 hours								
Continuous battery life		About 10 hours								
Battery life		⩾ 300 times								
Net weight		30kg		55kg				110kg		
Power adapter		Input: AC 220V 50HZ Output : DC 12V 500mA								

NEWJIELI

TOUCHSCREEN TORQUE WRENCH CALIBRATOR

Product Overview

This calibrator is a new development by the company, designed specifically for calibrating torque wrenches and various tools involving tightening force. It is widely used in electrical manufacturing, mechanical manufacturing, automotive lightweight industry, professional research, and testing sectors.

Features

- Floating loading structure: Enhances loading flexibility and adaptability, allowing for free adjustment of the force application point up and down.
- Screw drive design: Ensures a large free stroke for loading in the left and right directions, facilitating various testing procedures.
- Large handwheel operation: Humanized design for effort-saving operation, improving work efficiency.



Product Specification

Model		NBJ-M100	NBJ-M200	NBJ-M300	NBJ-M500	NBJ-M1000	NBJ-M2000	NBJ-M3000
Measuring Range Resolution	N.m	100.0/0.01	200.00/0.01	300.00/0.01	500.00/0.01	1000.0/0.1	2000/0.1	3000/0.1
	kgf.cm	1021.0/0.1	2042.0/0.1	3063.1/0.1	5105.2/0.1	10210/1	20420/1	30631/1
	lbf.in	886.2/0.1	17724/0.1	2658.6/0.1	4431.1/0.1	8862/1	17724/1	26586/1
Dimensions		645*420*220mm				1433*685*360mm		
Inspected length range		130~750mm				250~980mm	250~1800mm	
Rotation angle		0~60°				0~360°		
High stroke		130mm				150mm		
Precision		± 1%						
Peak sampling frequency		2000HZ						
Battery		7.2V 1.2V*6 Nickel-Metal Hydride (NiMH) Battery Pack						
Charge time		4~6 hours						
Continuous battery life		About 10 hours						
Battery life		⩾ 300 times						
Power adapter		Input : AC 220V 50HZ Output : DC 12V 500mA						
Net weight		65kg				335kg		

TORQUE WRENCH CALIBRATOR

Product Overview

The NNBH torque wrench calibrator is a specialized device used for calibrating torque wrenches and torque screwdrivers. It is primarily utilized for testing and calibration of torque wrenches, preset torque wrenches, and pointer torque wrenches. It is widely applied in electrical manufacturing, mechanical manufacturing, automotive light industry, professional research, and testing industries. Torque values are displayed on a digital instrument, ensuring accuracy and clarity.

Product Specification

Model	NNBH-20	NNBH-50	NNBH-100	NNBH-200	NNBH-500
Maximum	20N.m	50N.m	100N.m	200N.m	500N.m
Min resolution	0.001	0.001	0.001	0.01	0.01
Precision	± 1%				
Unit	N.m,kgf.cm, lbf.in				
Power	Input : AC 220V or 110V Output :DC 12V				
Dimensions	299*299*242			772*400*276	1142*553*360
Work temperature	5~35℃				
Transport temperature	-10℃ ~60℃				
Relative humidity	15%~80%RH				
Work environment	There are no seismic sources or corrosive substances around.				
Net weught	12Kg			27Kg	43Kg



NEWJIELI

MANUAL PUSH PULL TEST STAND

Product Overview

NST-J and NST-S hand-operated tension and tension test racks are specially equipped for NSH and NZT series thrust and tension meters (purchased separately), and can be combined into testing machines for different purposes to perform accurate tensile load, insertion force, destructive test, etc., When the force value is displayed, the tensile and tension load, insertion force, destructive test, etc. Can be combined into a test machine for different purposes. At the same time, a ruler can also be installed to display its displacement, and the stroke can be locked and different workpieces can be compared and tested under the same displacement.



Product Specification

- Maximum reachable: 500N
- Effective area of test area: 90mm
- Dimensions: 240 x 255 x 505(mm)
- Effective area of test area: 105 x 100(mm)
- Effectivetravel: 105 x 152(mm)
- Net weight: A bout 12kg

SPRIAL TEST STAND

Product Overview

NSL-S and NLL spiral test racks are suitable for domestic and imported NSH and other series pointer push-pull force meters (purchased separately) and NZT series digital display push-pull force meters (purchased separately) to do tensile load, insertion force, destructive force and other tests, steel ruler or digital display ruler can also be installed, The user can clearly observe the amount of displacement during the test.



Product Specification

- Maximum reachable: 500N
- Effective area of test area: 150mm
- Dimensions: 230 x 150 x 490(mm)
- Effective area of test area: 105 x 100(mm)
- Net weight: A bout 12kg

NEWJIELI

BUTTON PULL FORCE TESTER

Product Overview

NSNQ button tension tester can be equipped with NZT, NSH push-pull force meter and special fixture, which is specially used to measure the buckle force of the button or the destructive force of the clothing. The purpose is the manufacturer's responsibility to ensure that buttons, buttons and fixtures can properly fixed to the ready-to-wear to prevent buttons and the like from leaving the ready-to-wear, causing the baby to have the opportunity to swallow the danger. Therefore, all buttons, buttons and fixed decorations on ready-to-wear clothing must pass the inspection of the button tester.



Product Specification

- Maximum reachable: 1000N
- Effective area of test area: 180mm
- Dimensions: 260 x 360 x 700(mm)
- Net weight: A bout 12kg

SPIRAL SIDE SWING TEST BENCH

Product Overview

NLR and NLR-S spiral side crank testing machines are specially equipped for NZT series and NSH series thrust-tension meters (purchased separately), and can be combined into testing machines for different purposes, suitable for various insertion and pull forces, pressing forces, damage tests and other tests.

The base is equipped with a standard mobile platform, which can be moved left and right, front and rear directions, which is convenient for accurate clamping.



Product Specification

Model	NLR-500 NLR-500(With ruler)	NLR-1000 NLR-1000(With ruler)
Maximum load	500N	1000N
Effective travel	180	
Dimension (mm)	260x360x500 or 700(mm)	
Machine height optional	500mm or 700mm	500mm or 700mm
Net weight	About 19kg	About 18kg

NEWJIELI

SPIRAL VERTICAL AND HORIZONTAL TEST BENCH

Product Overview

NLK and NLK– S screw adjustable test stands are specifically designed for the NZT, NSH series push–pull force gauges (additional items), enabling the combination into various types of testing machines for accurate tests such as insertion and removal force, pressing force, and destructive tests. They display force values and can also be equipped with a scale to show displacement, facilitating comparative testing of different parts under the same displacement.



Product Specification

- Rated load: 500N
- Effective travel: 140 mm
- Dimension: 200 x 160 x 540(mm)
- Net weight: About 15kg

PEEL OFF FORCE TEST STAND

Product Overview

NBF peeling force special testing machine, specially equipped for NSH and NZT series thrust–tension meters, can be combined into testing machines for different purposes, specially used to test the adhesion of copper foil circuits on PC boards or tin foil, aluminum foil, tape, etc. Fastness of adhesion to the surface of the object. During the test, the sample is peeled off at a vertical angle to measure the actual strength.



Features

- Manually operated trapezoidal screw rotation, simple and stable operation
- This rack can be installed on the table surface for use,making the rack more stable

Product Specification

- Dimension: 350 x 210 x 450mm
- Net weight(kg): 18.5kg
- Effective travel: 150mm
- Max load value: 500N

MANUAL HORIZONTAL TEST STAND

Product Overview

The NMH manual horizontal testing bench is suitable for adapting to both domestic and imported NZT, NLB series pointer-type push-pull force gauges (additional purchases required) and the NSH series digital push-pull force gauges (additional purchases required) for testing pull, pressure loads, and insertion and removal forces.



Product Specification

- Rated load: 500N、1000N
- Effective travel: 50 mm
- Dimension: 450 x 260 x 160(mm)
- Net weight: About 10.5kg

ELECTRIC HORIZONTAL TEST STAND

Product Overview

The NJH electric horizontal test bench is a push-pull load test bench specially designed for NSH series and NZT series push-pull force meters (purchased separately). This product adopts a double guide rod structure, which has the advantages of good stability, wide application range, easy to use, etc., and has stepless speed regulation, manual (jog), and automatic control switching functions. It is suitable for various tests such as push-pull load, insertion force, destructive test, etc.



Product Specification

- Max load:500N、1000N
- Effective travel: 150 mm (Customize:280mm)
- Test speed: 80~500 mm/min
- Work voltage: AC200V
- Dimension: 270 x 200 x 255(mm)
- Net weight: (500N)35kg；(1000N)38mm

NEWJIELI

ELECTRIC SINGLE COLUMN VERTICAL TEST STAND

Product Overview

The NJX electric vertical single-column test stand is specifically designed for use with the NSH series and NZT series push-pull force gauges (additional components) as a push-pull load testing stand. This product boasts good stability, broad applicability, and ease of use. It features a continuous speed adjustment, manual (point control) to automatic control switching functionality. It is suitable for a variety of push-pull load tests, insertion and removal force tests, and destructive tests.



Product Specification

Model	NJX-200-500	NJX-400-500	NJX-700-500	NJX-200-1000	NJX-400-1000	NJX-700-1000
Max load	500N			1000N		
Effective travel	200mm	400mm	700mm	200mm	400mm	700mm
Test speed	70~270mm/min					
Work voltage	AC220V					
Dimension (mm)	280x340x780	280x340x980	280x340x1270	280x340x780	280x340x980	280x340x1270
Net weight	38kg	40kg	42kg	38kg	40kg	42kg

ELECTRIC DOUBLE COLUMN VERTICAL TEST STAND

Product Overview

The NJV electric vertical double-column test bench is a push-pull load test bench specially designed for NSH series and NJT series push-pull force meters (purchased separately). This product adopts a double guide rod structure, which has the advantages of good stability, wide application range, easy to use, etc., and has stepless speed regulation, manual (jog), and automatic control switching functions. It is suitable for various tests such as push-pull load, insertion force, destructive test, etc.



Product Specification

Model	NJV-5000	NJV-5000 Heightened type	NJV-10000	NJV-20000	NJV-30000
Max load	5000N		10000N	20000N	30000N
Effective travel	220mm(Customize 220mm~ 1000mm)				
Test speed	60~220mm/ min		50~180mm/ min		
Work voltage	AC220V				
Dimension (mm)	400x250x1050(mm)	400x250x1300(mm)	430*250*1160mm		
Net weight	56kg	60kg	65kg		

NEWJIELI

DIGITAL SPRING TENSION AND COMPRESSION TEST MACHINE

Product Overview

NSD digital display spring tension and pressure testing machine is a special instrument for testing the deformation and load relationship characteristics of tensile and compressive elastic springs. It is suitable for the working load test of tensile and compression springs under a certain working length, and also It can be used for elastic load testing of elastic devices such as reeds and rubber. The instrument has a distinction between with a printer and without a printer.



Features

- High precision and high resolution: accuracy at level 1, with the smallest reading reaching 0.001N.
- Three display modes are available for selection: real-time, peak, and automatic peak
- Three unit conversions: N, kg, lb;
- Peak hold function: can capture the peaks during the test;
- Features: Free setting of upper and lower limit deviations, alarm indicator lights display in red and green lights and automatic alarm with a buzzer.
- Automatic peak function: free setting of peak hold time (1~99 seconds);
- Automatic shutdown feature: shutdown after 0~99 minutes of inactivity(0 seconds means no automatic shutdown);
- Gravity Acceleration Function: You can freely set it (9.000~9.999) according to the region.
- Calculation Function: Connects to the computer, automatically calculates the maximum, minimum, and average for each test;
- Built-in printer: capable of printing 1,000 sets of stored test data and maximum, minimum, average values, etc.

Product Specification

Model		NSD-10	NSD-20	NSD-30	NSD-50	NSD-100	NSD-150	NSD-200	NSD-300	NSD-500	NSD-1000	NSD-2000	NSD-3000	NSD-5000
With printer		NSD-10P	NSD-20P	NSD-30P	NSD-50P	NSD-100P	NSD-150P	NSD-200P	NSD-300P	NSD-500P	NSD-1000P	NSD-2000P	NSD-3000P	NSD-5000P
Maximum testing machine load	N	10	20	30	50	100	150	200	300	500	1000	2000	3000	5000
	kg	1	2	3	5	10	15	20	30	50	100	200	300	500
	Lb	2.2	4.5	6.5	11	22	33	45	65	110	220	450	650	1100
Min resolution	N	0.001				0.01					0.1			
	kg	0.0001				0.001					0.01			
	Lb	0.0001				0.001					0.01			
Pressure plate diameter		34mm			48mm						108mm			
Measurable longest free length of a spring		80mm			150mm						200mm			
Displacement ruler stroke		60mm			90mm						150mm			
Displacement ruler division value		0.01mm												
Precision		±1%												
Work voltage		AC 220V~50Hz												
Net weight		About 14.5kg				About 18kg					About 67kg			
Dimension		490×280×300mm				570×280×300mm					790×280×200mm			

NEWJIELI

INTEGRATED TENSION AND PRESSURE TESTING MACHINE

Product Overview

The NJS all-in-one tensile-compression tester is a specialized machine designed for testing either tension or compression. It replaces traditional (tactical) testing machines + digital indicator testing methods, enhancing the accuracy of tests and the convenience of operation. It is applicable for testing in industries such as rubber and plastics, light industry and textiles, building doors and windows, composite materials, wires and cables, automotive parts, power machinery, and research institutions, including push-pull loads, insertion forces, and destructive tests.

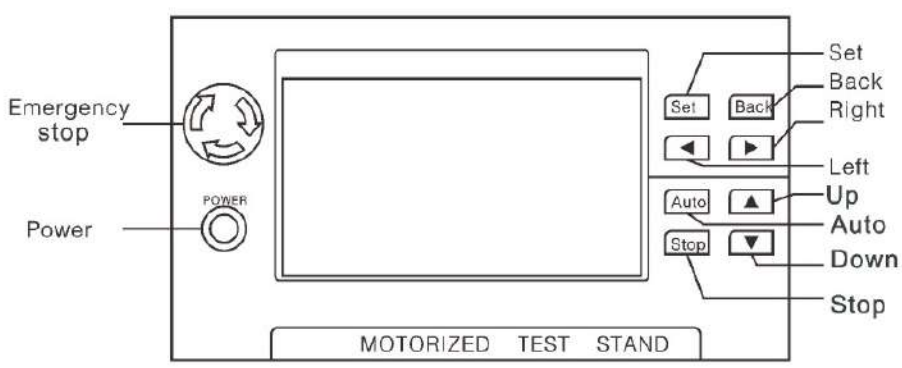



Features

- 7-inch large-screen LCD display;
- Real-time force value and displacement display;
- Two measurement modes: real-time/peak;
- Two working modes: automatic/manual;
- Human-computer Chinese dialogue is intuitive and clear;
- There is a function of continuously increasing and decreasing the speed;
- With emergency stop function.

Product Specification

Model	NJS-2	NJS-3	NJS-5	NJS-10	NJS-30	NJS-50	NJS-100	NJS-300	NJS-500	NJS-1000
Max load value	2N	3N	5N	10N	30N	50N	100N	300N	500N	1000N
	0.2Kg	0.3Kg	0.5Kg	1Kg	3Kg	5Kg	10Kg	30Kg	50Kg	100Kg
	0.45lb	0.65lb	1.1lb	2.2lb	6.5lb	11lb	22lb	65lb	110lb	220lb
Load value	0.001N				0.01N			0.01 N		
	0.0001kg				0.001kg			0.01kg		
	0.0001lb				0.001lb			0.01lb		
Precision	± 0.5%									± 1%
Effective travel	400mm									
Test speed	1~300mm/min									
Work voltage	AC:110V or AC:220V									
Dimension	290*500*900mm									
Net weight	36.6kg									

NEWJIELI

AUTOMATIC SPRING TESTING MACHINE

Product Overview

The fully automatic spring testing machine is a new type of elastic tension testing machine that combines advanced electronic technology and efficient and precise mechanical transmission. This series of fully automatic spring tension and pressure testing machines is made in accordance with the technical requirements stipulated in the international JB/T7796-2005 "Technical Conditions for Spring Tension and Pressure Testing Machines". Equipped with high-precision sensors, it can be accurately loaded and positioned. It is mainly suitable for testing the tensile force, compressive force, stiffness, fatigue, etc. of elastic devices such as springs, rubber, and reeds under a certain working length. It is widely used in spring manufacturing companies and user units.



Features

- Can measure the tensile force, pressure, stiffness, displacement, and display dates, batch numbers, and other contents of the spring.
- Three units displayed: N, Kgf, lb
- You can specify 1, 2, 3, 4, 5 sections.
- "Long-Hare, Hare-Long two modes"
- The sampling rate is adjustable, with multiple measurement methods available
- Using large-scale integrated circuits, the testing accuracy has been improved, and the human-computer Chinese dialogue is clear and intuitive.
- A high-efficiency, fully-functional, user-friendly spring testing program designed according to national standards.
- Considering both the principle and the software program, the range of accurate measurement has been improved.
- Both suitable for batch testing and sorting on the production line for springs, as well as for precise spot testing in the laboratory.
- Equipped with programmable and mechanical dual limit protection, the measured values are corrected through pre-loading and deflection compensation.

Product Specification

Model	NTSM-10	NTSM-20	NTSM-50	NTSM-100	NTSM-200	NTSM-500
Max load	10N	2ON	50N	100N	200N	500N
Min division value	0.0001N	0.001N	0.001N	0.001N.	0.01N	0.01N
Unit	N、Kgf、lb					
Precision	±0.5%					
Precision	0.01 mm					
Max stroke	170mm					
Speed range	1- 500mm/min					
Standard compress plate diameter	ϕ60mm					
Manual button can be moved at once	1mm, 0. 1mm, 0.01 mm					
	Compress, Stretch					
Spring test selection	1. Set the length to measure the load 2. Set the load to measure the length					
Spring test selection	3. Set the deformation to measure the load 4. Set the load to measure the deformation					
Dimension	450mm*380mm* 550mm					
Weight	About 58kg					
Power	220V 4.5A					
Machine characteristic	1、Automatically test free length 2、Automatically compensate for deformation of load sensor and spring hook					
	3、Overload protection function of load sensor and emergency stop function					
	4、Connectable to a mini printer					

NEWJIELI

DIGITAL TWISTING SPRING TEST MACHINE

Product Overview

The NNH series digital torsion spring tester is a smart, multifunctional measurement instrument designed for testing and inspection of various torsion springs. It is characterized by its ease of operation, high accuracy, comprehensive functions, and portability. It is widely used in various industries such as electrical, light industry, mechanical manufacturing, and research institutions. This instrument comes in versions with and without a printer.



Features

- High precision and high resolution: accuracy to the 1st level, with the smallest reading reaching 0.01 mN.m.
- Large screen display: length 100mm, width 35mm.
- Three display modes are available for selection: real-time, peak, and automatic peak
- Three unit conversions: N, m, kg, cm, lbf, in (also including smaller scales such as mN, m, g, cm, mbi, in);
- Peak hold function: can capture the peaks during the test;
- Feature comparison: free setting of upper and lower limit deviations, alarm indicator lights display in red and green lights and the buzzer automatically alerts
- Automatic peak function: free setting of peak hold time (1~99 seconds);
- Automatic shutdown feature: 0-99 minutes of accidental automatic shutdown (0 seconds indicates no automatic shutdown);
- Calculation Function: Connects to the computer, automatically calculates the maximum, minimum, and average values for each test
- Built-in printer: capable of printing 99 sets of stored test data and maximum, minimum, average values, etc
- Patent Design: Utility Model Patent Number: ZL201020209521.5

Product Specification

Model	NNH-100A	NNH-200A	NNH-300A	NNH-500A	NNH-1000A	NNH-2000A	NNH-3000A
Measurement range	100mN.m	200mN.m	300mN.m	500mN.m	1000mN.m	2000mN.m	3000mN.m
Resolution	0.01mN.m				0.1mN.m		
Measure the angular range	0~9999.9°						
Angle Resolution	0.1°						
Precision	± 1%						
Measured spring height	< 80mm						
Torque plate diameter	100mm						
Loading method	Manual						
Dimension	450 x 220 X 260(mm)						
Power	AC 220V~50HZ						

Model	NNH-5000A	NNH-1	NNH-2	NNH-3	NNH-5	NNH-10	NNH-20
Measurement range	5000mN.m	1N.m	2N.m	3N.m	5N.m	10N.m	20N.m
Resolution	0.1mN.m	0.0001N.m				0.001N.m	
Measure the angular range	0~9999.9°						
Angle Resolution	0.1°						
Precision	± 1%						
Measured spring height	< 80mm						
Torque plate diameter	100mm						
Loading method	Manual						
Dimension	450 x 220 X 260(mm)						
Power	AC 220V~50HZ						

NEWJIELI

HORIZONTAL TORSION SPRING TESTER

Product Overview

NDT horizontal torsion spring testing machine is a sophisticated, multi-functional measuring instrument designed for the testing and inspection of various torsion springs. It is applicable for torque springs, coiled springs, and other types of elastic components in various shapes.

The torque testing of torsion pieces is characterized by simplicity of operation, high accuracy, comprehensive functionality, and ease of portability. It is widely used in various industries such as electrical, light industry, mechanical manufacturing, and research institutions. This instrument comes with a printing function.There is a distinction between a printer and one without a printer.



Features

- High precision, high resolution, fast sampling speed, large screen display.
- The upper and lower limit values can be set, and three parameters (torque force value, rotation angle, spring stiffness) can be displayed with sound and light alarm function.
- Three types of units N.m,kgf.cm , lbf.in convert to each other.
- The three modes of real-time, peak, and automatic peak can be switched at will.
- Peak retention, automatic release function, and release time are freely set.
- There is no automatic shutdown function without operation, and the time can be set freely.
- Large storage capacity, 99 sets of test data can be saved.
- There is no automatic shutdown function without operation, and the time can be set freely.
- Built-in micro printer (optional).
- The USB interface communicates with the PC, and can be connected to a computer for synchronization testing.
- Patented design: Practical Patent number: ZL201320729931.6

Product Specification

Model	NDT-500	NDT-1000A	NDT-2000A	NDT-3000A	NDT-5000A	NDT-1	NDT-2	NDT-5	NDT-10	NDT-20	NDT-30	NDT-30
Max range (N.m)	500	1000	2000	3000	5000	1	2	5	10	20	30	50
Measurement range (N.m)	5~500m	10~1000m	20~2000m	30~3000m	50~5000m	0.01~1	0.02~2	0.05~5	0.1~10	0.02~20	0.3~30	
Minimum reading value	0.01N.m	0.1mN.m				0.0001N.m		0.001 N.m				
Angle Resolution	0.1°											
Measure the angular range	0~9999.9°											
Test piece rotation diameter	Φ100mm											
Test piece length	150mm											
Loading method	Manual											
Precisoin	±1%											
Sample holding method	Mandrel configuration											
Power	AC 220v 50Hz											
Dimension	710* 320*290(mm)											
Weight	About 37.5kg											

NEWJIELI

AUTOMATIC FULLY SPRING TESTING MACHINE

Product Overview

NNSM automatic torsion spring testing machine is made in accordance with the technical requirements of the national standard JB/T7796-2005. This instrument is mainly used to test the torque-angle and angle-torque of various springs. It is a high-end machine.
The performance testing machine can give full play to the high-efficiency and labor-saving spring testing function, and is widely used in spring manufacturing companies and various scientific research sites.



Features

- Automatically complete load (angle) spring constant tests for 1 to 5 segments and determine the free angle.
- Automatic origin calibration ensures high accuracy, compensating for the deformation of the rigid structure of the load sensor and machine frame.
- Touchscreen interface makes setting test conditions more convenient and quick.
- The system automatically calculates the upper and lower tolerance limits, making it convenient for input.
- Supports various test types, meeting the needs of production and spring engineering design.
- Test load units include N.m, Kg.cm, lb.in.
- The measurement range can be freely switched among five segments.
- Automatically correct the zero position of the test plug gauge and the rotating plug gauge through the turntable.
- Overload protection and emergency shutdown function.
- You can set the number of repeated loops for automatic testing through simple operations.
- Data can be printed output.
- The rotation displacement control button provides 10-degree, 1-degree, and 0.1-degree easing rotation levels to ensure the accuracy of angle control.

Product Specification

Model	NNSM-1	NNSM-3	NNSM-5	NNSM-10	NNSM-20
Max torque(N.m)	1	3	5	10	20
Minimum torque display value	0.0001	0.0001	0.0001	0.0001	0.001
Unit	N.m、Kg.cm、lb.in				
Test speed	1-1800deg/min				
Manual rotation Angle selection	10deg、1deg、0.1deg				
Test product diameter	Φ50mm				
Test angle	7200deg				
Rotation direction	Left-handed and right-handed				
Power	AC 220V(110AC)				
Dimension (mm)	697*450*623				
Weight (Kg)	120				

NEWJIELI

SINGLE ARM ELECTRONIC UNIVERSAL TESTING MACHINE

Product Overview

The NWDS single-arm electronic universal testing machine is specifically designed for universities, research institutes, and new generations of microcomputer-controlled electronic universal testing machines. The machine and accessories are designed based on advanced international technologies, featuring an attractive appearance, convenient operation, stable and reliable performance. It utilizes high-precision stepping motors and drivers, which are reduced to drive the screw assembly for loading, enabling the performance of various mechanical tests on samples, including tension, compression, bending, and shear.

Applicable for the tensile and glass tearing performance testing of products such as plastic films, composite films, soft packaging materials, adhesives, adhesive tapes, pressure-sensitive adhesives, rubber, paper, etc., it is used by scientific research institutions, colleges and universities, industrial and mining enterprises, technical supervision, commerce and inspection arbitration, and so on.



Features

- It is used for tensile, peeling, tearing and other tests of various non-metallic material styles, as well as special tests for some products.
- Executive standard: Electronic universal testing machine GB/T16491-1996 can be expanded with large deformation (rotary or fixed), and can be selected according to the experimental standard or test style provided by the customer. The fixture or specially designed fixture is attached.

Product Specification

Model	NWDS-01	NWDS-02	NWDS-05	NWDS-1	NWDS-2	NWDS-5
Max test force (N)	100	200	500	1000	2000	5000
Test force measurement range	2%~100%FS					
Accuracy of test force indication	Better than the shown value 1%					
Test force resolution	1/300000FS					
Beam displacement measurement accuracy	Resolution above 0.0025mm					
Test speed range	1~500mm/min Stepless speed regulation					
Speed control precision	±0.5%					
Deformation quasi-hardness	±0.1%					
Test room	700mm					
Power	Single-phase 220V±10%50HZ					
Work temperature	Room temperature -35° C Relative humidity no more than 80%					
Host dimension	530*270*1400mm					
Host weight	100KG					

NEWJIELI

HYDRAULIC UNIVERSAL TESTING MACHINE

Product Overview

For various types of tests on metal materials including tension, compression, bending, shear, and other special tests on some products.



Features

- Dual-space structure for easy conversion between tensile and compression tests.
- Semi-closed clamp design for increased rigidity.
- Manual valve control for hydraulic flow to achieve loading and unloading.
- High-speed platform with high integration and strong control and data processing capabilities.
- 24-bit high-precision data acquisition system with 8-channel AD conversion.
- USB 1.1 communication with a 12Mb/s transmission rate.
- 4-layer PCB design for anti-interference.
- Standard USB interfaces for plug-and-play functionality and hot-swapping support.
- Software-configurable interface features for a reasonable layout.

Meet the standards

- GB/T 228-2002 Room temperature tensile test method for metal materials
- GB/T 7314-2005 Gold material room temperature compression test method

Original configuration

- A set of tensile clamps and a set of compression clamps.

Expandable configuration

- Bolt stretching fixture, nut retention fixture
- Bending fixture, shear fixture

Application

- Measurement Quality Control;
- Machinery Manufacturing;
- Electronics and appliances;
- Cables and wires;
- Civil aviation;
- Higher educational institutions;
- Commodity inspection and arbitration;
- Petrochemical industry;
- Metallurgy and Steel;
- Automotive production;
- Technical supervision department;
- Research and test institutes;
- Research and test institutes;

Product Specification

Model	NWEW-300	NWEW-600	NWEW-1000	NWEW-2000
Max test force(KN)	300	600	1000	2000
Test machine accuracy grade	0.5 Grade			
Test force indication relative error	Within ± 0. 5%			
Force measurement range	1%~1 0%S (The whole process is not divided)			
Deformation (extensometer) measurement range	1%~ 100%FS			
Deformed indication relative error	Within ±0.5%			
Deformation resolution	Maximum deformation amount 130000			
Piston moving speed range	0~200mm/min	0~150mm/min	0~100mm/min	0~80mm/min
Number of columns	4	4	6	6
Effective distance between columns (mm)	405	430	430	640
Maximum distance of the jaw extension (mm)	520	710	760	920
Maximum compression space (mm)	520	700	630	800
Clamping range of clamp block(mm)	Φ10~20;20~32	Φ10~18;18~29;29~4	Φ15~30;30~45;45~50	Φ15~30;30~55;55~70
Allows expansion of sample specification range	Φ6~14;16~22	Φ6~14;16~25;25~32	Φ6~14;16~25;28~40	Φ6~14;28~35;40~50
Sample trial gage thickness (mm)	2~13	2~16	2~20	10~40
Pressure plate size (mm)	Φ120	Φ150	Φ200	Φ240
Piston stroke (mm)	120	150	200	240
Host dimension (mm)	820*570*1955	940*650*2400	1020*670*2600	1370*820*3300
Oil source dimensions (mm)	1150*600*900	1150*600*900	1150*600*900	1150*600*900
High power (KW)Three-phase five-wire construction=*	5*AC380V50HZ	6*AC380V50HZ	6*AC380V50HZ	8*AC380V50HZ
Expandable configuration, roll center distance (mm	30~400	30~400	30~400	60~500
Bending fixture rolling diameter (mm)	3~200(Optional)	3~200(Optional)	3~200(Optional)	60~500(Optional)
Weight (kg)	≈ 1500	≈ 2500	≈ 3500	≈ 8000



NJJ-01

Name: Jaw clamp

Max Load Value: 500N

Maximum opening size:
Φ3.5mm、2.3mm



NJJ-02

Name: Straight-tooth clamping fixture

Max Load Value: 500N

Maximum opening size: Φ12mm



NJJ-03

Name: Straight tooth single clamp clamp

Max Load Value: 500N

Maximum opening size: Φ4mm



NJJ-04

Name: Fabric tension fixture

Max Load Value: 500N

Maximum tolerable
measured thickness: Φ4mm

Maximum measurable width: 55mm



NJJ-05

Name: Ball Head Fixture

Max Load Value: 500N

Diameter: Φ12, 16, 22mm



NJJ-06

Name: Terminal clamp

Max Load Value: 500N

Maximum opening size: Φ10mm



NJJ-07

Name: Straight-tooth clamping fixture

Max Load Value: 500N

Maximum opening size: Φ32mm



NJJ-08

Name: Jaw clamp

Max Load Value: 500N

Maximum opening size: Φ3.5mm



NJJ-09

Name: Pressure plate

Max Load Value: 500N

Maximum tolerable
measured thickness: Φ5mm

Maximum measurable width: 80mm



NJJ-10

Name: Pressure plate

Max Load Value: 500N

Maximum opening size: Φ3.5mm



NJJ-01-2

Name: Duckbill fixture

Max Load Value: 500N



NJJ-15

Name: U Type fixture

Max Load Value: 1KN, 5KN, 20KN.50KN

Plug hole diameter: Φ11.5, 19.5mm



NJJ-01-2

Name: Duckbill fixture

Max Load Value: 500N

Maximum opening size: 3.5mm



NJJ-101

Name: Standard part strength test fixture

Max Load Value: 15000N

Standard part: M3、M4、M6、M8、M10



NJJ-011

Name: Eccentric wheel fixture

Max Load Value: 500N

Maximum opening size: 2.5mm



NJJ-012

Name: Stripping fixture

Max Load Value: 500N

Maximum opening size: 2mm



NJJ-013

Name: Three-jaw pliers fixture

Max Load Value: 500N

Maximum opening size: Φ20mm



NJJ-014

Name: Three-jaw pliers fixture

Max Load Value: 300N

Maximum opening size: Φ6-35mm



NJJ-015

Name: Button base fixture

Max Load Value: 500N



NJJ-016

Name: Vise clamp

Max Load Value: 500N

Maximum opening size: Φ37mm



NJJ-017

Name: Zipper hook clamp

Max Load Value: 500N



NJJ-018

Name: Zipper hook clamp

Max Load Value: 500N



NJJ-019

Name: Zipper jaw clamp

Max Load Value: 500N

Maximum opening size: Φ10mm



NJJ-020

Name: Beak clamp

Max Load Value: 5000N

Maximum opening size: Φ8mm



NJJ-021

Name: Terminal base fixture

Max Load Value: 500N

Maximum opening size: Φ1.1-4.6mm



NJJ-022

Name: Rubber clamp

Max Load Value: 200N

Maximum opening size: Φ3mm



NJJ-023

Name: Tine clamp

Max Load Value: 1000N

Maximum opening size: Φ18mm



NJJ-024

Name: Cable clamp

Max Load Value: 1000N

Maximum opening size: Φ18mm



NJJ-025

Name: Pointed terminal clamp

Max Load Value: 1000N

Maximum opening size: Φ18mm



NJJ-026

Name: Wire clamp

Max Load Value: 5000N

Maximum opening size: Φ9mm



NJJ-027

Name: Metal fixture

Max Load Value: 3000N

Maximum opening size: Φ5mm



NJJ-028

Name: Universal fixture

Max Load Value: 5000N

Maximum opening size: Φ10mm