General technical parameters		Electrical technical parameters	
Stepping angle	1.8°	Rated voltage	24V DC
Number of phases	2	Rated current	2.0A
Insulation resistance	100MΩMIN(500V DC)	Resistance	1.35±15%Ω
Insulation level	Class B/winding	Inductance	2.8±20%mH
Weight	About 500g	Holding torque	0.48N.m
Braking torque	130gf.cm REF.	Moment of inertia	About 77g.cm²

Wiring Diagram

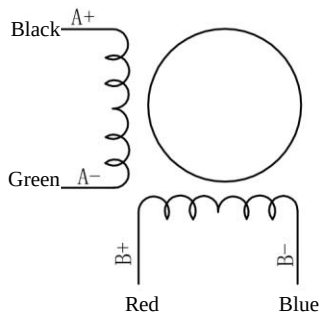

Overall dimension: unit=mm

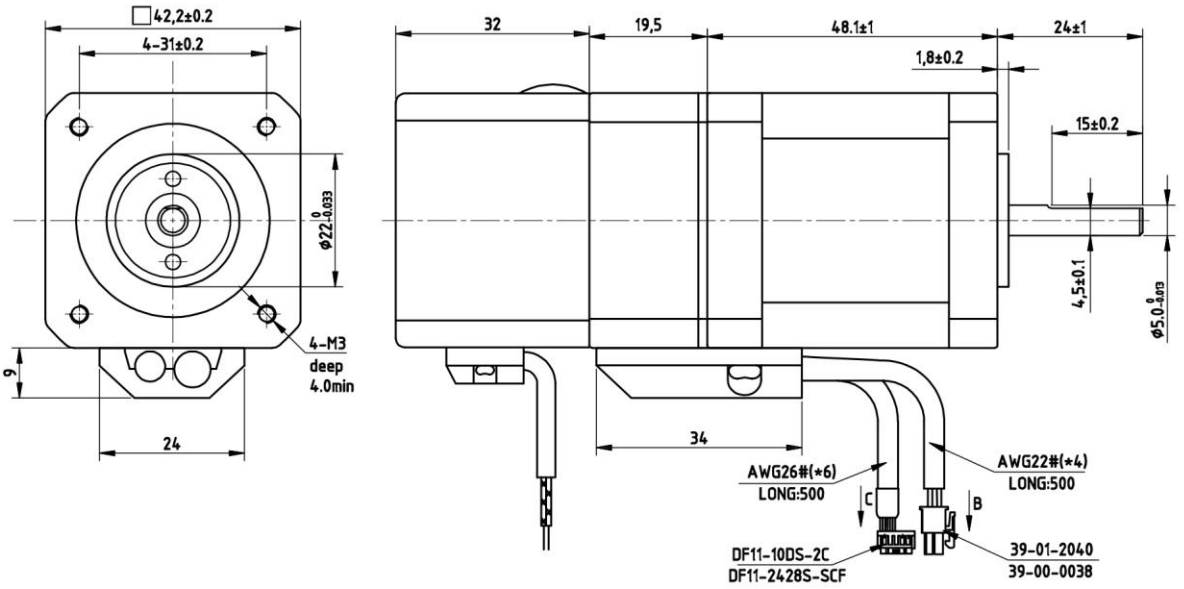

Direction C
3:1

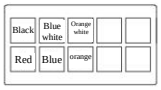

Direction B
3:1

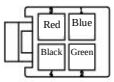

Brake Connections

24V 0.5N·m

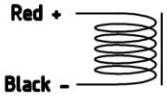

Encode Control
(1000CPR)

1	Black	EGED
2	Red	+5VCC
3	Blue/ White	EA-
4	Bule	EA+
5	Orange/ White	EB-
6	Orange	EB+

TOLERANCES (EXCEPT AS NOTES)	±0. 3

MATERIAL	----						42K48-E1000M
FINISH	----						
		SYM	DATE	REVISION NO.	REVISIONS	BY	NOTE

DRAWN	DESIGNED	CHECKED	CHECKED	SCALE	FREE	TITLE	MOTR SPECIFICATION	THIRD ANGLI PROJECTION
Dongguan Kaifull ‘19-06-24 Xu Yuanhao	Dongguan Kaifull ‘19-06-24 Xu Yuanhao					DWG.NO.	Y-19-0624-0	
				Guangdong Kaifull Electronics Technology Co., Ltd.			SHEET	1/1