| General technical parameters | | Electrical technical parameters | |
|---|---|---|---|
| Stepping angle | 1.8° | Rated voltage | 24V DC |
| Number of phases | 2 | Rated current | 0.4A |
| Insulation resistance | 100MΩMIN(500V DC) | Resistance | 12±15%Ω |
| Insulation level | Class B/winding | Inductance | 3.7±20%mH |
| Weight | About 80g | Holding torque | 25mN.m |
| Braking torque | 4mN.m REF. | Moment of inertia | About 3g.cm² |

Wiring Diagram

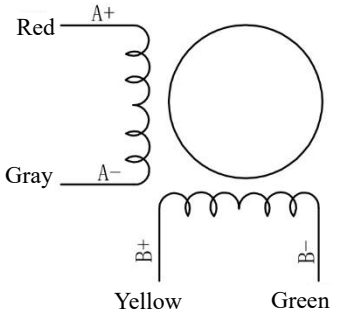


# Overall dimension: unit=mm

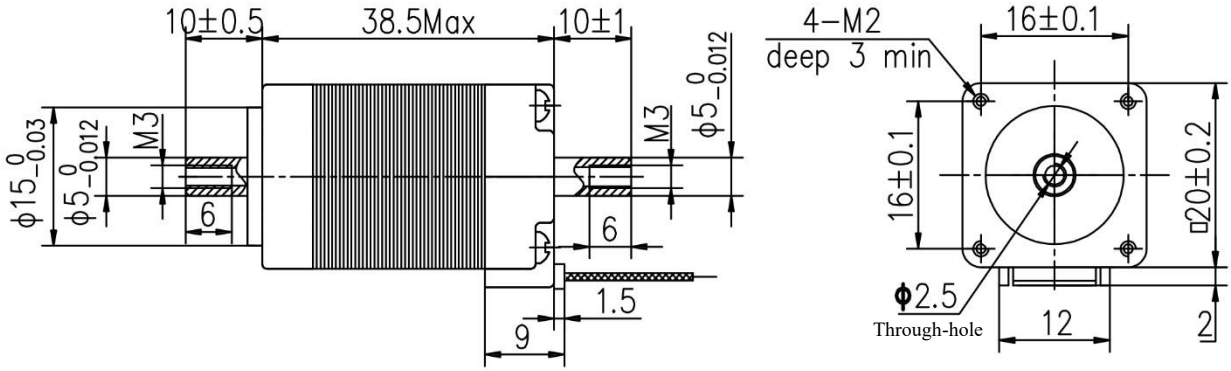


Harness assembly

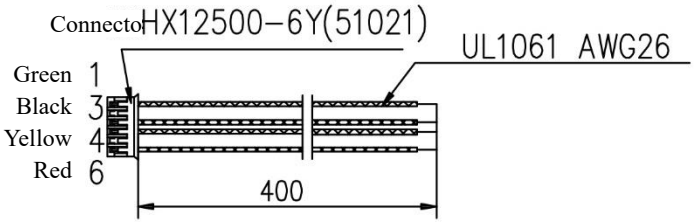


| TOLERANCES (EXCEPT AS NOTES) | ±0. 3 |
|---|---|

| MATERIAL | ---- | | | | | | Y07-20D1-1007-ZK3 2 |
|---|---|---|---|---|---|---|---|
| FINISH | ---- | | | | | | |
| | | SYM | DATE | REVISION NO. | REVISIONS | BY | NOTE |

| DRAWN | DESIGNED | CHECKED | CHECKED | SCALE | 1:1 | TITLE | MOTR SPECIFICATION | THIRD ANGLI PROJECTION |
|---|---|---|---|---|---|---|---|---|
| Dongguan Kaifull 18-08-14 Xu Yuanhao | Dongguan Kaifull 18-08-14 Xu Yuanhao | | | | | DWG.NO. | Y-18-0814-0 | |
| | | | | Guangdong Kaifull Electronics Technology Co., Ltd. | | | SHEET | 1/1 |