万易热能
WANYI THERMAL ENERGY

GAS BURNERS
TECHNICAL SALES CATALOGUE

2025|3

Serving The Global Heat Energy Technology

CONTENTS

WS BS SERIES

Characteristics

- One-stage gas burner.
- Complies with EU standard EN676 Class 3, NOx emissions <80mg/kWh.
- Reducing noise.
- The ease of installation and adjustment.
- To obtaining the smallest size possible to fit into any sort of boiler available on the market.

Power kW	Model	Article No.	Powe supply	Motor power W	Package size LxPxH(mm)	Weight kg
35~92	WS BS2	101 031 001	230V 50Hz	90	405x298x375	11
65~197	WS BS3	101 031 002	230V 50Hz	150	450x345x440	15
110~249	WS BS4	101 031 003	230V 50Hz	250	510x345x440	16.5

*60 Hz can be cuscomized

Size

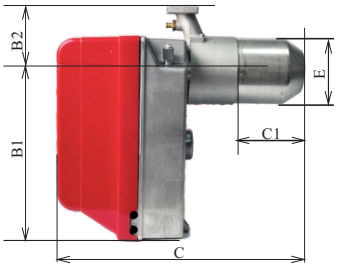

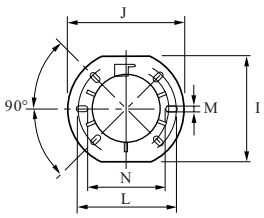

Model	A1	A2	B1	B2	C	C1	E	I	J	L	M	N
	mm	mm	mm	mm	mm	mm	Φmm	mm	mm	Φmm	M	Φmm
WS BS2	126	126	230	98	352	114	106	167	192	170	11	140
WS BS3	150	150	285	108	390	128	129	201	216	190	11	160
WS BS4	150	150	286	104	446	168	137	203	218	200	11	170

Firing Rates

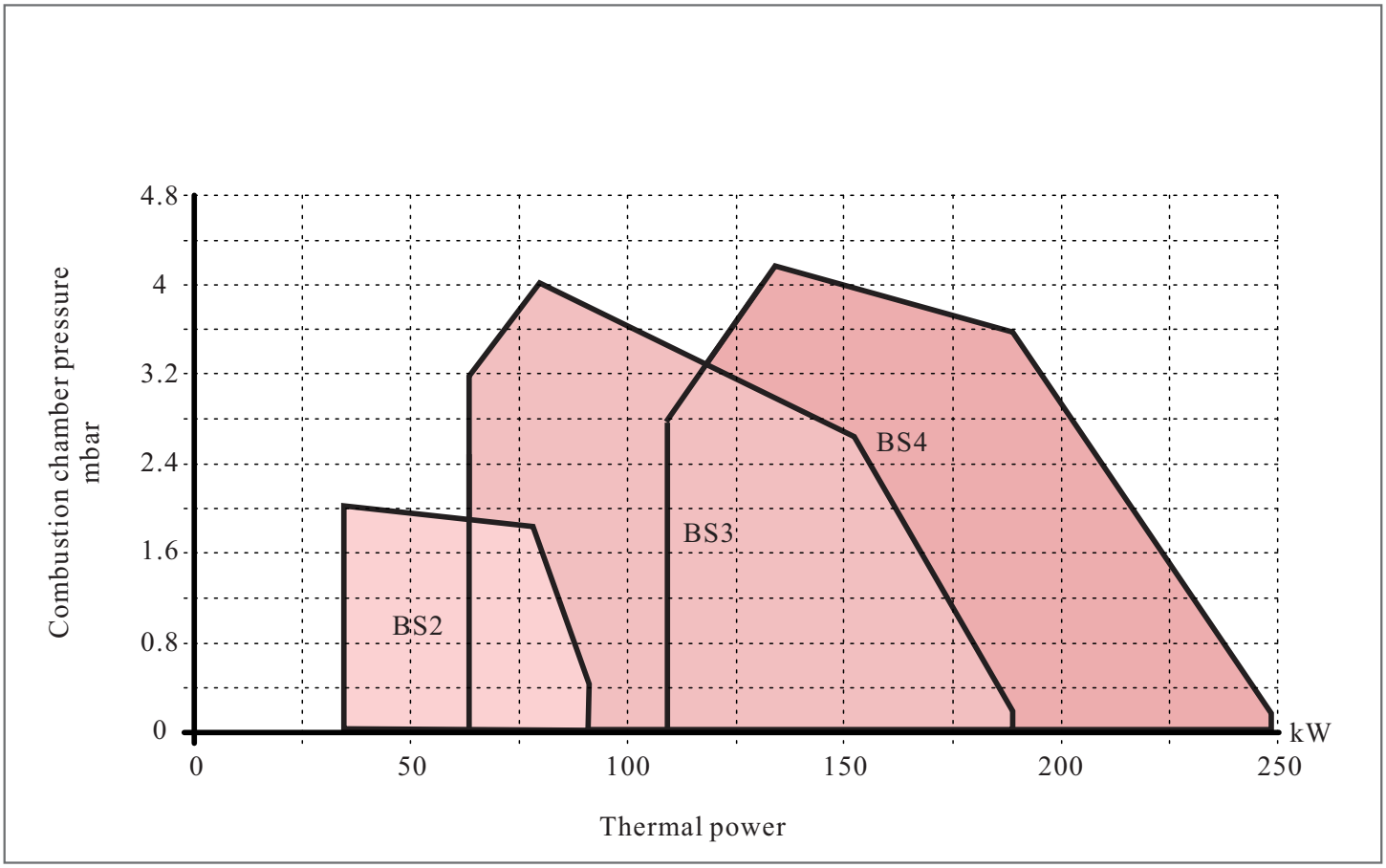

Useful firing rates for choosing the burner

Test condition conforming to en676
Temperature:20℃
Pressure:1013.5
Mbar altitude:0 m a.s.l

WS 40 FS SERIES

Characteristics

- One-stage gas burner.

Power kW	Model	Article No.	Powe supply	Motor power W	Package size LxPxH(mm)	Weight kg
42~116	WS 40 FS10	101 011 002	230V 50Hz	90	490x480x325	16
81~220	WS 40 FS20	101 011 003	230V 50Hz	150	560x460x370	20

*60 Hz can be cuscomized

Size

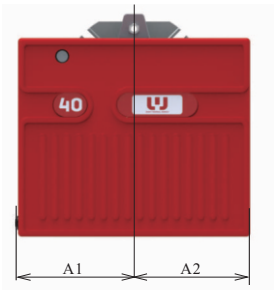

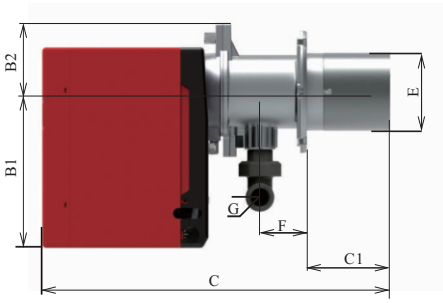

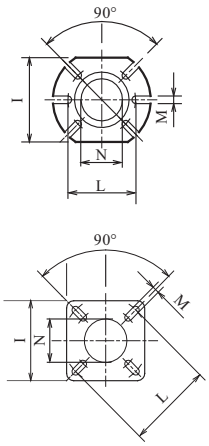

Model	A1	A2	B1	B2	C	C1	E	F	G	I	L	M	N
	mm	mm	mm	mm	mm	mm	Φmm	mm	mm	mm	Φmm	M	Φmm
WS 40 FS10	156	154	204	90	458	110	105	61	Rp314	160	152	11	110
WS 40 FS20	179	177	230	102	509	120	125	67	Rp314	169	171	12	130

Firing Rates

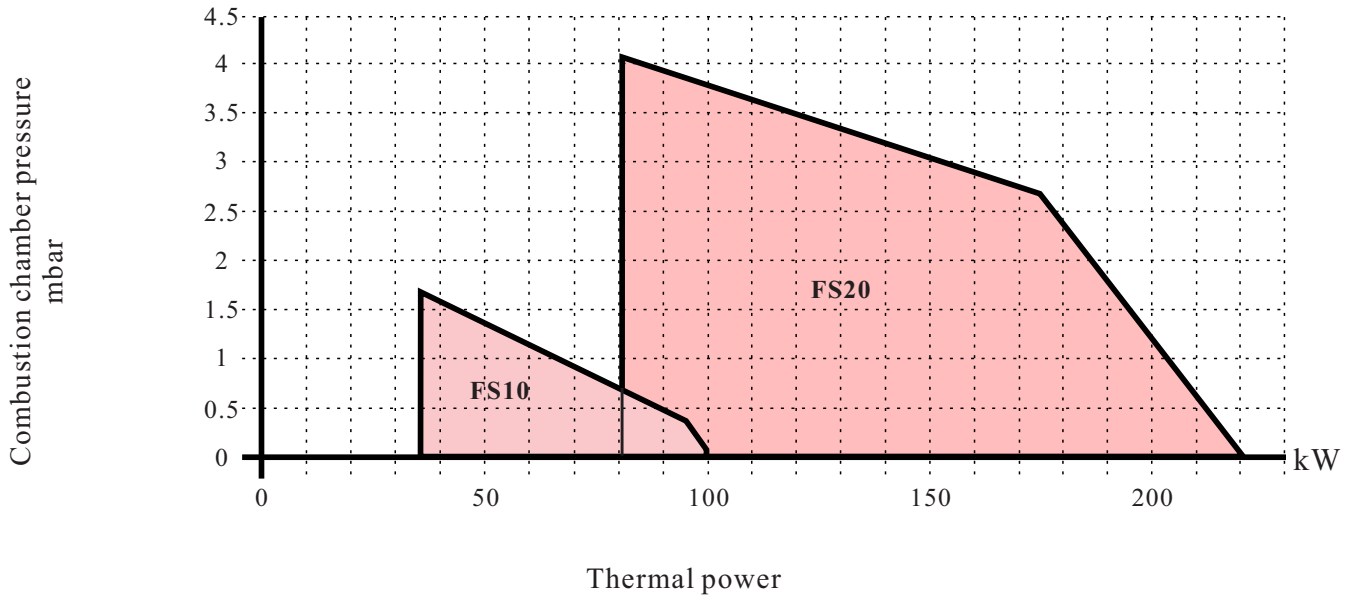

Useful firing rates for choosing the burner

Test condition conforming to en676
Temperature:20℃
Pressure:1013.5
Mbar altitude:0 m a.s.l

WS 34-44/1 MZ

Characteristics

- One-stage gas burner.

Power kW	Model	Article No.	Powe supply	Motor power W	Package size LxPxH(mm)	Weight kg
70~390	WS 34/1MZ	101 001 001	230V 50Hz	300	1000x500x485	30
100~550	WS 44/1MZ	101 001 002	230V 50Hz	420	1000x500x485	32

*60 Hz can be cuscomized

Size

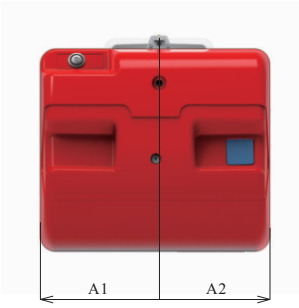

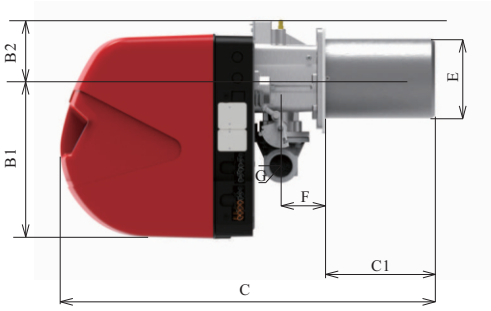

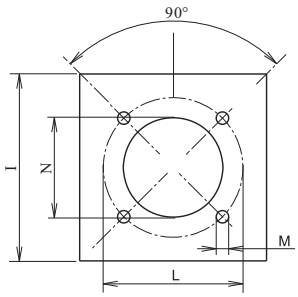

Model	A1	A2	B1	B2	C	C1	E	F	G	I	L	M	N
	mm	mm	mm	mm	mm	mm	Φmm	mm	mm	mm	Φmm	M	Φmm
WS 34/1 MZ	230	216	308	113	724	219	140	85	G1½"	210	224	4*M8	160
WS 44/1 MZ	230	216	308	113	724	219	152	85	G1½"	210	224	4*M8	160

Firing Rates

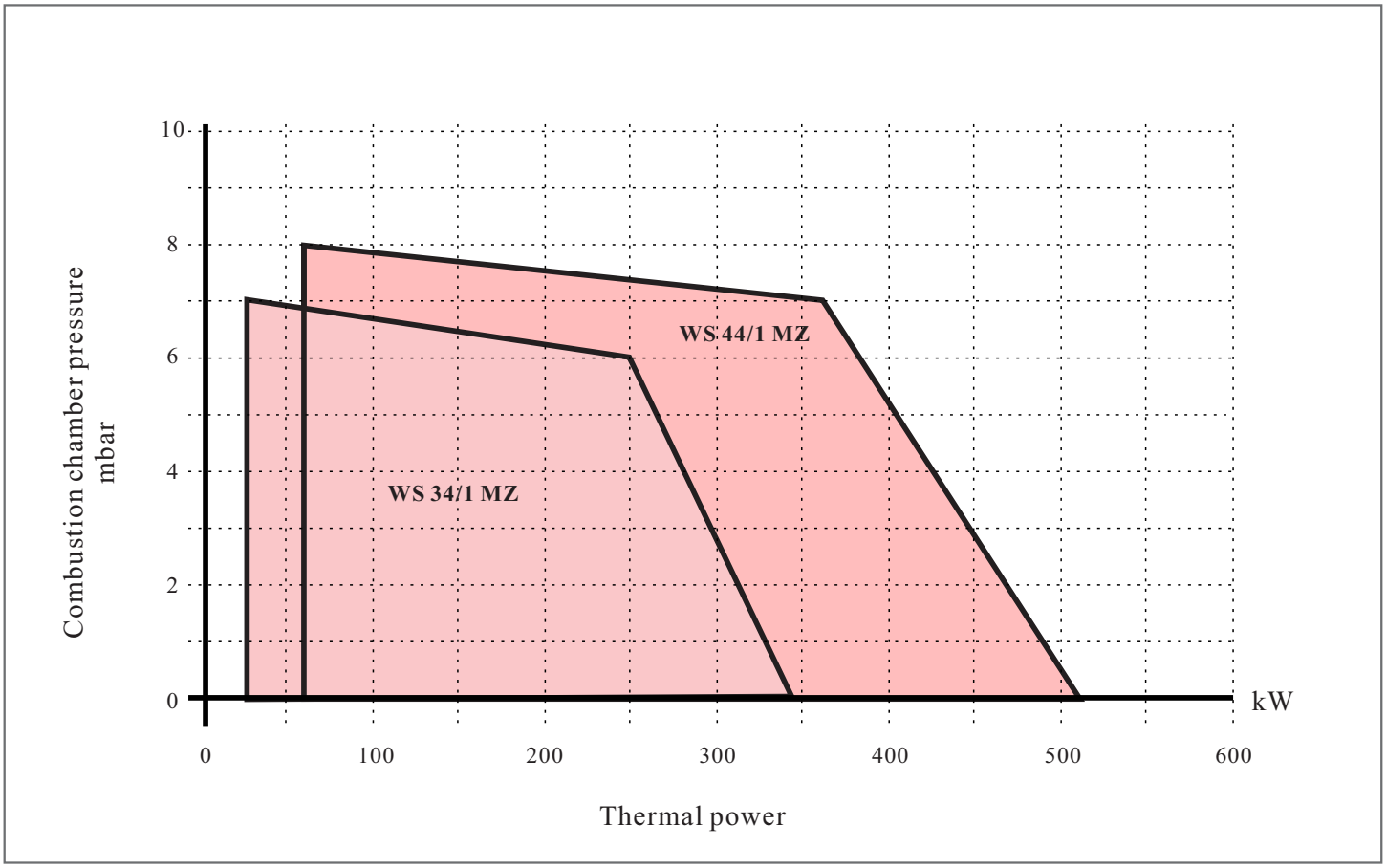

Useful firing rates for choosing the burner

Test condition conforming to en676
Temperature:20℃
Pressure:1013.5
Mbar altitude:0 m a.s.l

WS 34-44 MZ

Characteristics

- Two-stage progressive gas burner.

Power kW	Model	Article No.	Powe supply	Motor power W	Package size LxPxH(mm)	Weight kg
44/130~390	WS 34 MZ	101 001 003	230V 50Hz	300	1000x500x485	32
80/200~550	WS 44 MZ	101 001 004	230V 50Hz	420	1000x500x485	33

*60 Hz can be cuscomized

Size

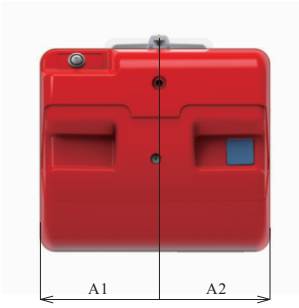

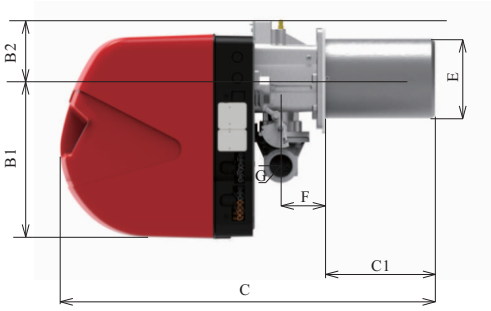

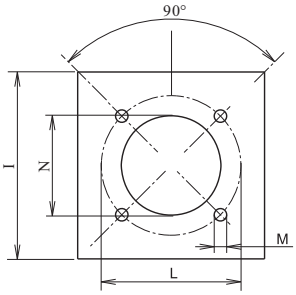

Model	A1	A2	B1	B2	C	C1	E	F	G	I	L	M	N
	mm	mm	mm	mm	mm	mm	Φmm	mm	mm	mm	Φmm	M	Φmm
WS 34 MZ	230	216	308	113	724	219	140	85	G1½"	210	224	4*M8	160
WS 44 MZ	230	216	308	113	724	219	140	85	G1½"	210	224	4*M8	160

Firing Rates

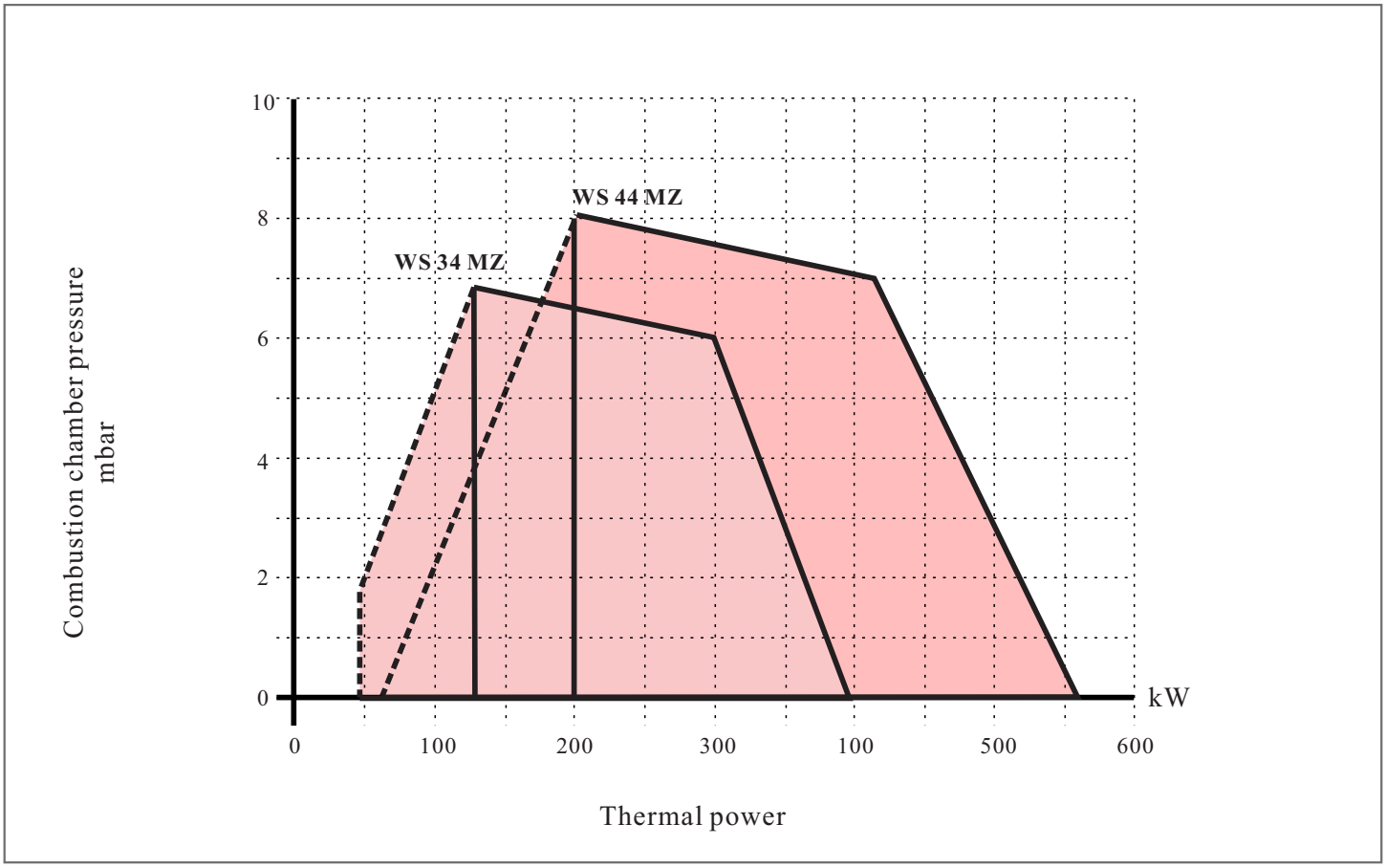

Useful firing rates for choosing the burner

Modulation range

Test condition conforming to en676
Temperature:20℃
Pressure:1013.5
Mbar altitude:0 m a.s.l

WS 34-44/E

Characteristics

- Electronic modulating gas burner.

Power kW	Model	Article No.	Powe supply	Motor power W	Package size LxPxH(mm)	Weight kg
44/130~390	WS 34/E	101 001 005	230V 50Hz	300	1000x500x485	32
80/200~550	WS 44/E	101 001 006	230V 50Hz	420	1000x500x485	33

*60 Hz can be cuscomized

Size

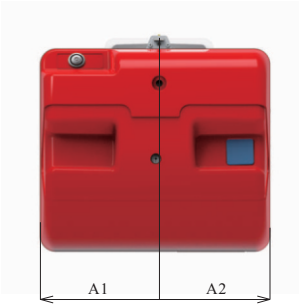

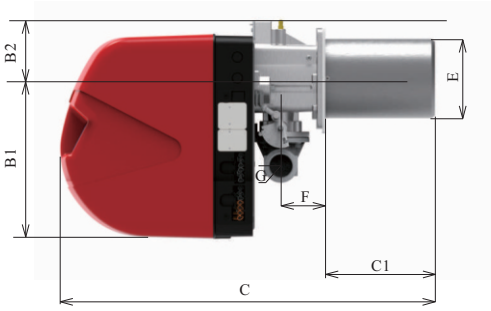

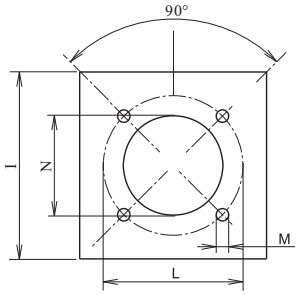

Model	A1	A2	B1	B2	C	C1	E	F	G	I	L	M	N
	mm	mm	mm	mm	mm	mm	Φmm	mm	mm	mm	Φmm	M	Φmm
WS 34/E	230	216	308	113	724	219	140	85	G1½"	210	224	4*M8	160
WS 44/E	230	216	308	113	724	219	140	85	G1½"	210	224	4*M8	160

Firing Rates

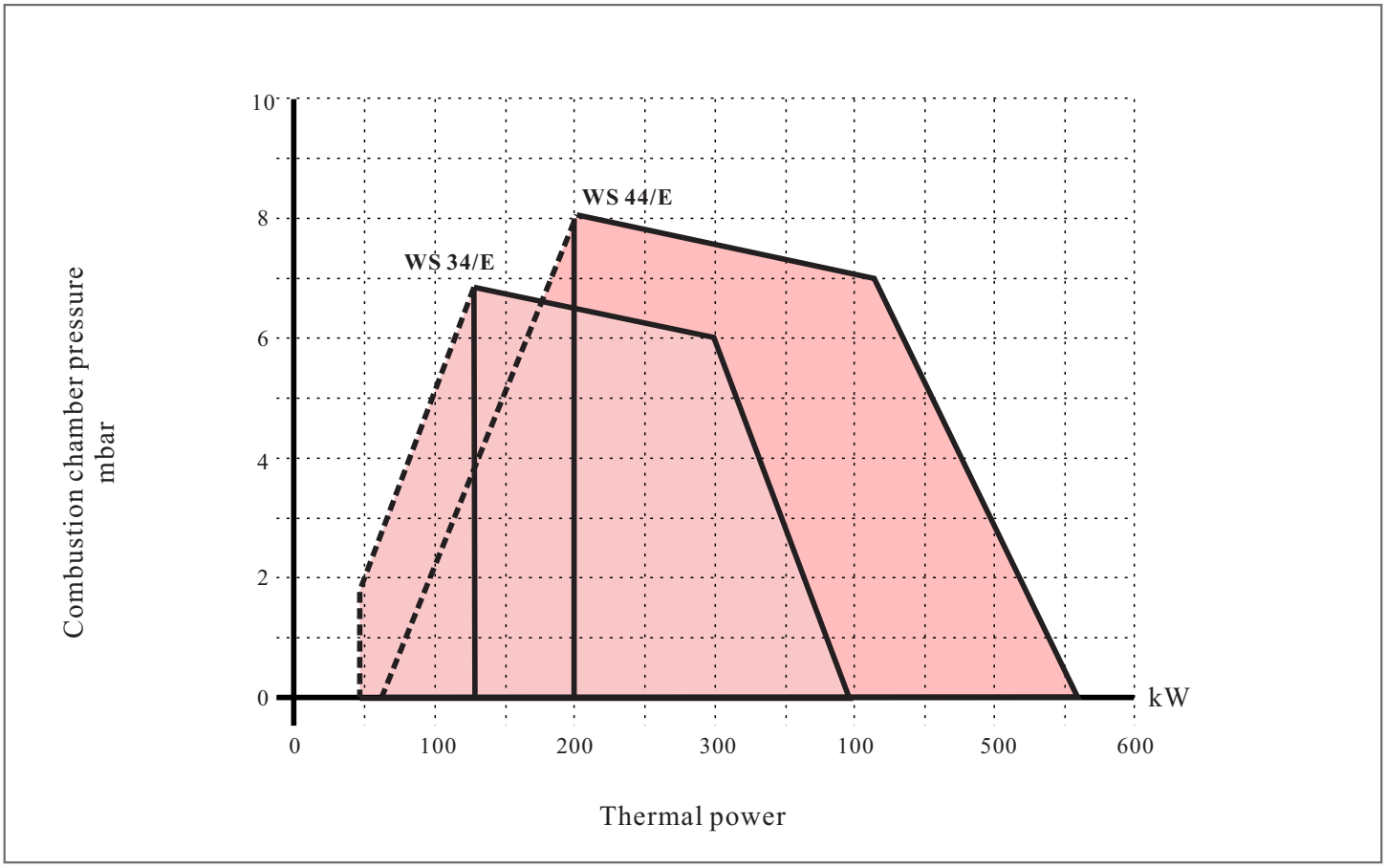

Useful firing rates for choosing the burner

Modulation range

Test condition conforming to en676
Temperature:20℃
Pressure:1013.5
Mbar altitude:0 m a.s.l

WS 70-250 MZ

Characteristics

- Two-stage progressive gas burner.

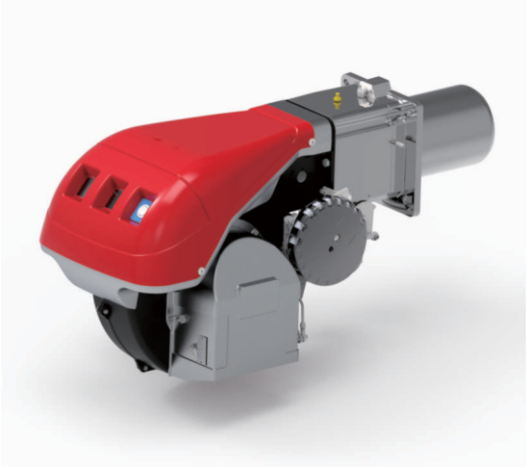

Power kW	Model	Article No.	Powe supply	Motor power kW	Package size LxPxH(mm)	Weight kg
192/465~814	WS 70 MZ	101 007 001	230V 50Hz	1.1	1300x740x682	70
232/698~1163	WS 100 MZ	101 007 002	230V 50Hz	1.5	1300x740x682	73
372/930~1512	WS 130 MZ	101 007 003	230V 50Hz	2.2	1300x740x682	76
300/900~1850	WS 150 MZ	101 007 004	230V 50Hz	3.0	1400x700x650	85
470/1279~2290	WS 190 MZ	101 007 005	230V 50Hz	4.5	1400x1000x650	87
600/1250~2650	WS 250 MZ	101 007 006	230V 50Hz	5.5	1400x1000x650	89

*60 Hz can be cuscomized

Size

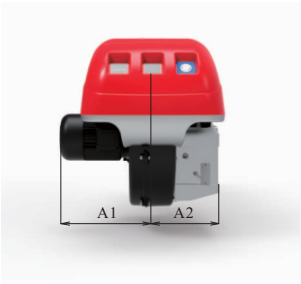

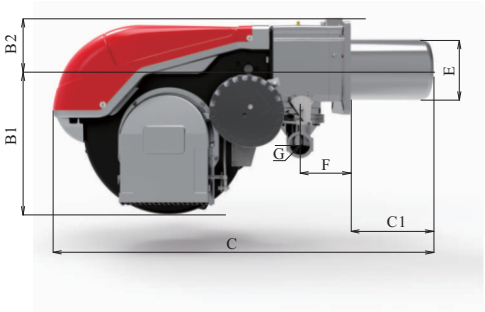

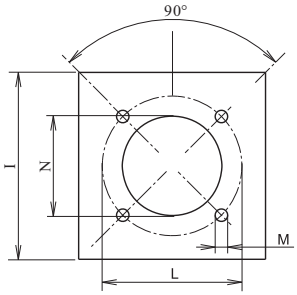

Model	A1	A2	B1	B2	C	C1	E	F	G	I	L	M	N
	mm	mm	mm	mm	mm	mm	Φmm	mm	mm	mm	Φmm	M	Φmm
WS 70 MZ	297	216	428	154	1095	248	179	136	Rc2"	265	275-325	4*M12	190
WS 100 MZ	297	216	428	154	1095	248	179	136	Rc2"	265	275-325	4*M12	190
WS 130 MZ	350	216	428	154	1123	276	189	136	Rc2"	265	275-325	4*M12	190
WS 150 MZ	370	305	435	165	1127	280	189	136	Rc2"	265	275-325	4*M12	190
WS 190 MZ	402	305	435	165	1250	372	222	150	Rc2"	320	305-368	4*M16	240
WS 250 MZ	413	305	435	165	1250	372	222	150	Rc2"	320	305-368	4*M16	240

Firing Rates

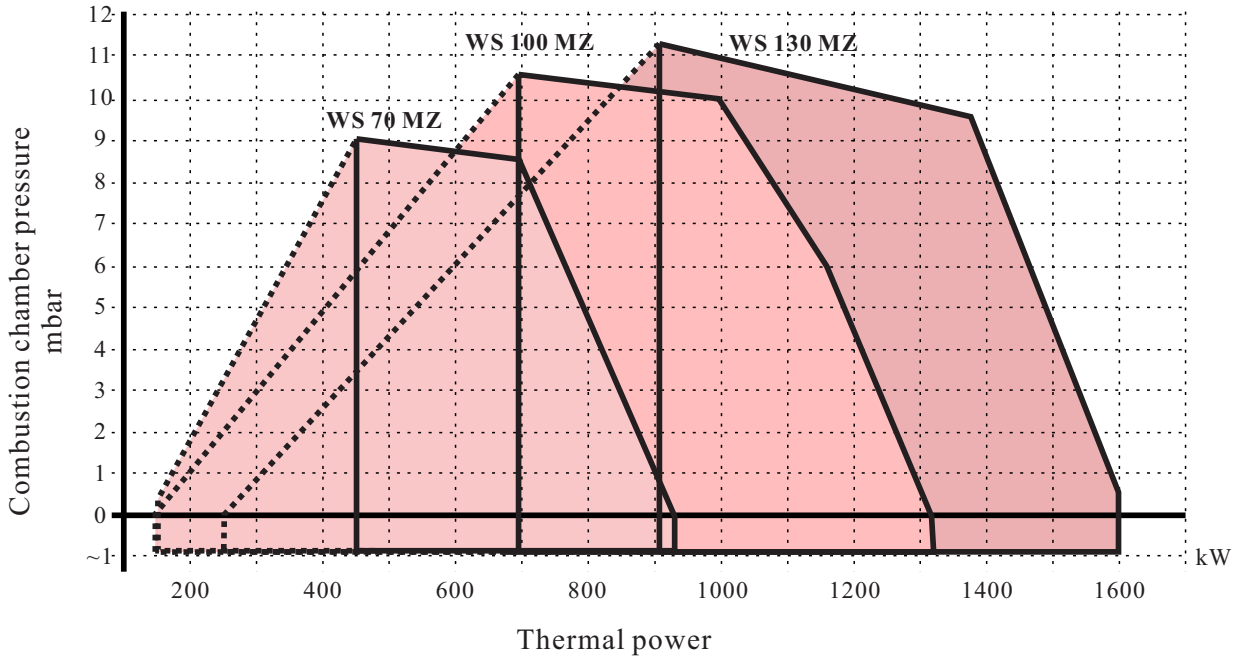

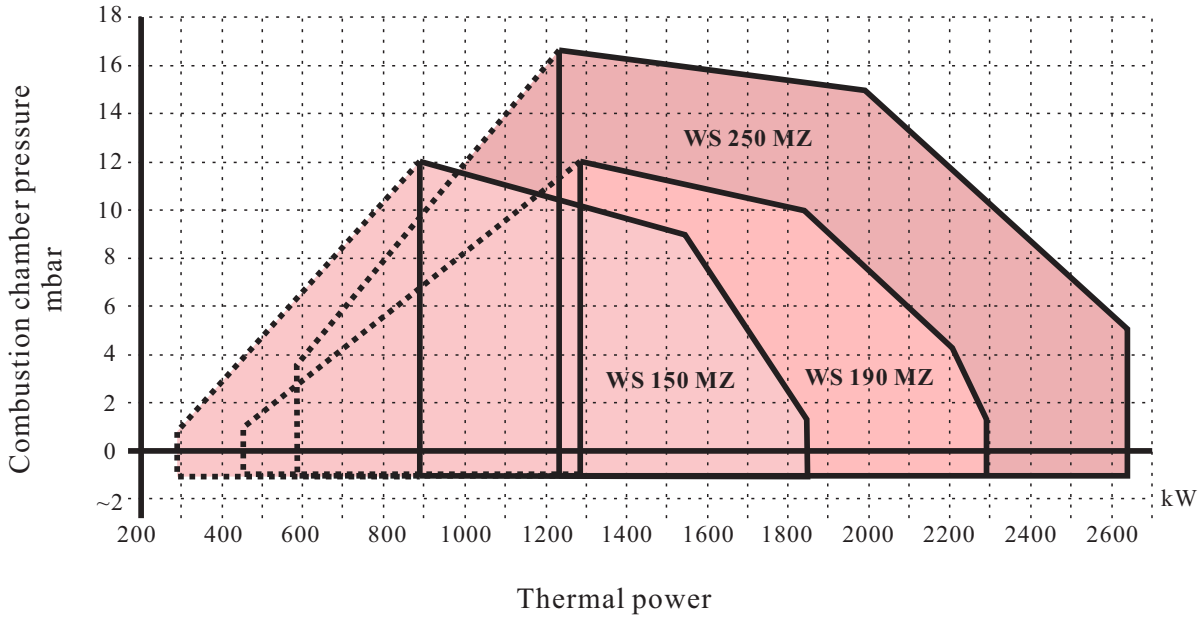

Useful firing rates for choosing the burner

Modulation range

Test condition conforming to en676
Temperature:20℃
Pressure:1013.5
Mbar altitude:0 m a.s.l

WS 70-250/M MZ

Characteristics

- Modulating gas burner.

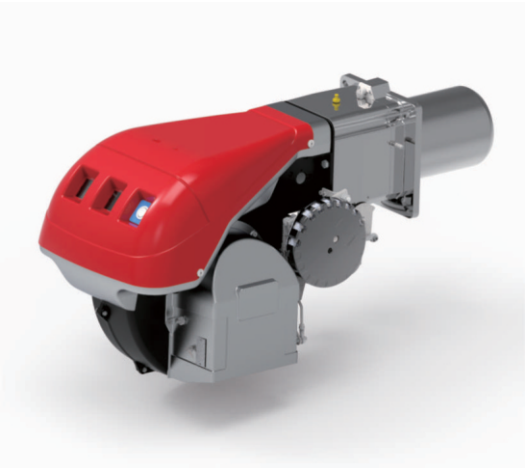

Power kW	Model	Article No.	Powe supply	Motor power kW	Package size LxPxH(mm)	Weight kg
192/465~814	WS 70/M MZ	101 007 007	230V 50Hz	1.1	1300x740x682	70
232/698~1163	WS 100/M MZ	101 007 008	230V 50Hz	1.5	1300x740x682	73
372/930~1512	WS 130/M MZ	101 007 009	230V 50Hz	2.2	1300x740x682	76
300/900~2290	WS 150/M MZ	101 007 010	230V 50Hz	3.0	1400x700x650	85
470/1279~1850	WS 190/M MZ	101 007 011	230V 50Hz	4.5	1400x1000x650	87
600/1250~2650	WS 250/M MZ	101 007 012	230V 50Hz	5.5	1400x1000x650	89

*60 Hz can be cuscomized

Size

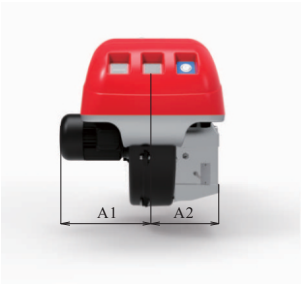

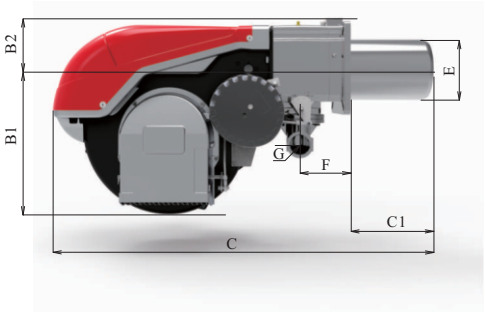

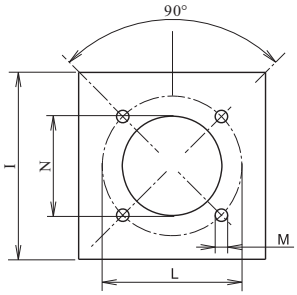

Model	A1	A2	B1	B2	C	C1	E	F	G	I	L	M	N
	mm	mm	mm	mm	mm	mm	Φmm	mm	mm	mm	Φmm	M	Φmm
WS 70/M MZ	297	216	428	154	1095	248	179	136	Rc2"	265	275~325	4*M12	190
WS 100/M MZ	297	216	428	154	1095	248	179	136	Rc2"	265	275~325	4*M12	190
WS 130/M MZ	350	216	428	154	1123	276	189	136	Rc2"	265	275~325	4*M12	190
WS 150/M MZ	370	305	435	165	1127	280	189	136	Rc2"	265	275~325	4*M12	190
WS 190/M MZ	402	306	435	165	1250	372	222	150	Rc2"	320	305~368	4*M16	240
WS 250/M MZ	413	306	435	165	1250	372	222	150	Rc2"	320	305~368	4*M16	240

Firing Rates

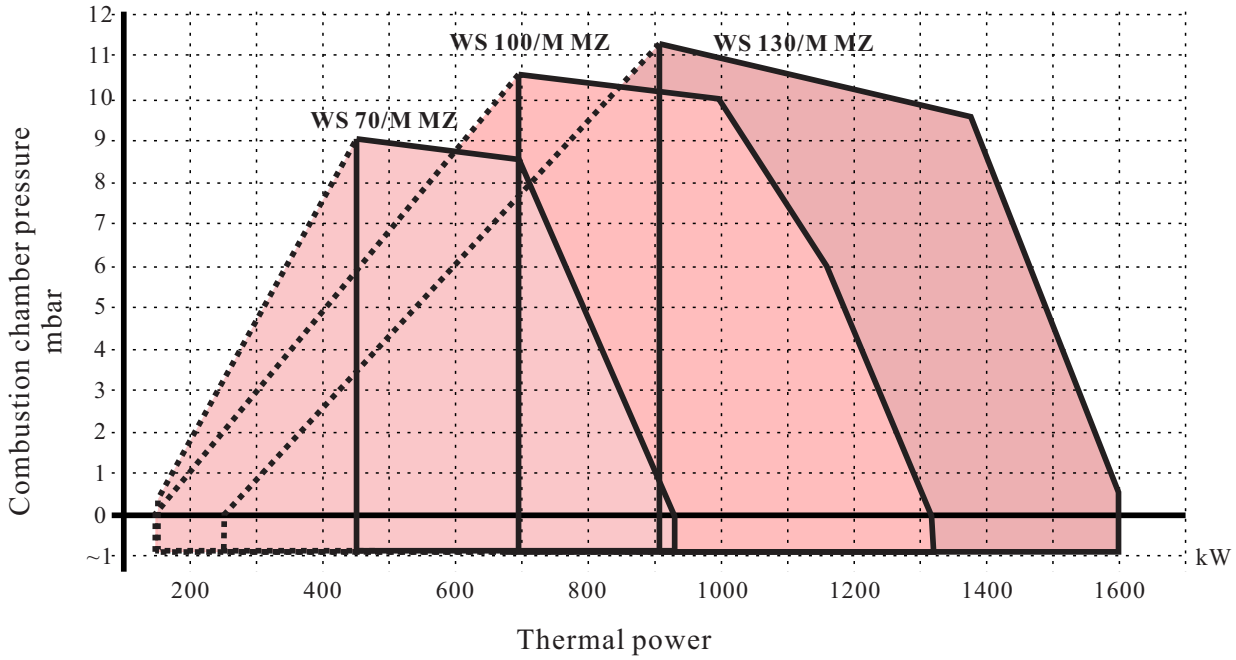

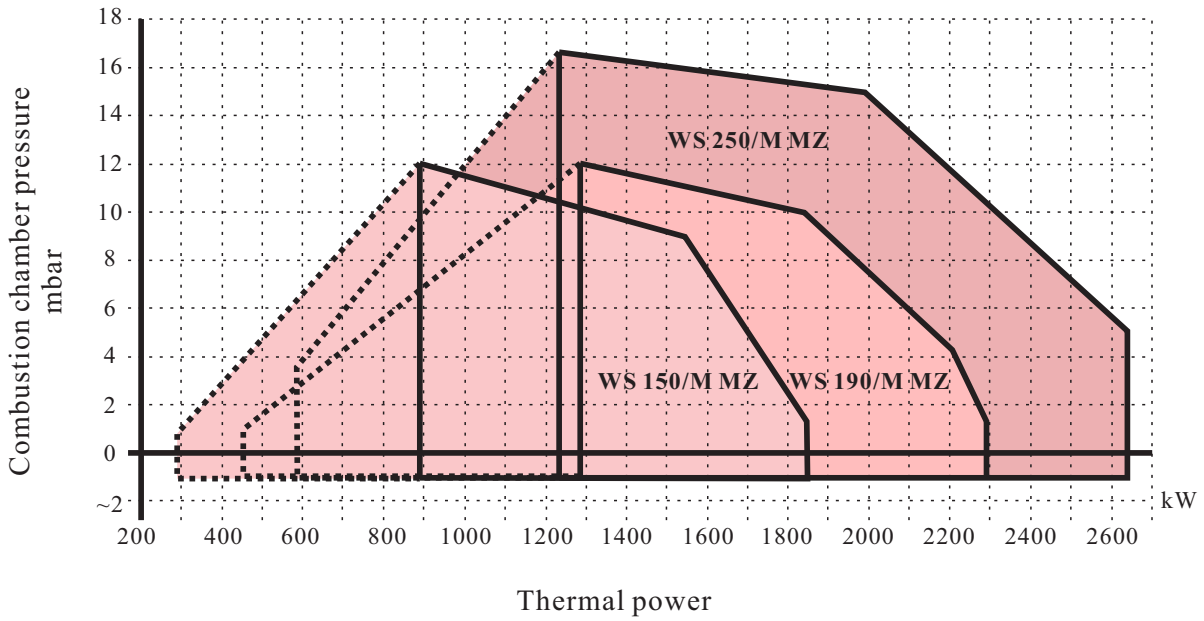

Useful firing rates for choosing the burner

Modulation range

Test condition conforming to en676
Temperature:20℃
Pressure:1013.5
Mbar altitude:0 m a.s.l

WS 70-250/E MZ

Characteristics

- Electronic modulating gas burner.

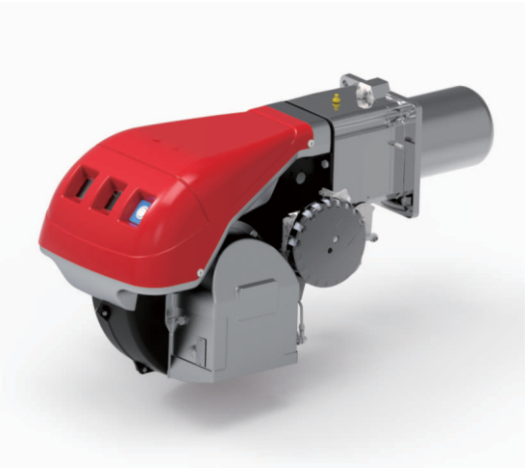

Power kW	Model	Article No.	Powe supply	Motor power kW	Package size LxPxH(mm)	Weight kg
192/465~814	WS 70/E MZ	101 007 013	230V 50Hz	1.1	1300x740x682	70
232/698~1163	WS 100/E MZ	101 007 014	230V 50Hz	1.5	1300x740x682	73
372/930~1512	WS 130/E MZ	101 007 015	230V 50Hz	2.2	1300x740x682	76
300/900~2290	WS 150/E MZ	101 007 016	230V 50Hz	3.0	1400x700x650	85
470/1279~1850	WS 190/E MZ	101 007 017	230V 50Hz	4.5	1400x1000x650	87
600/1250~2650	WS 250/E MZ	101 007 018	230V 50Hz	5.5	1400x1000x650	89

*60 Hz can be cuscomized

Size

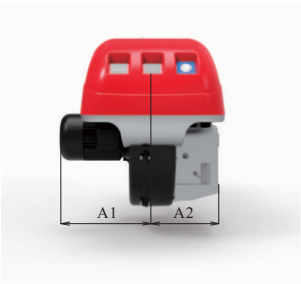

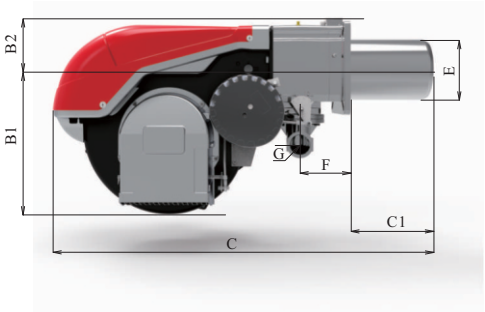

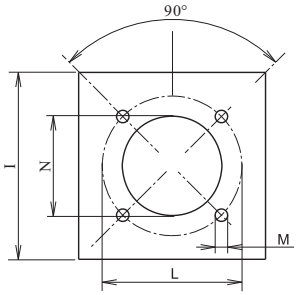

Model	A1	A2	B1	B2	C	C1	E	F	G	I	L	M	N
	mm	mm	mm	mm	mm	mm	Φmm	mm	mm	mm	Φmm	M	Φmm
WS 70/E MZ	297	216	428	154	1095	248	179	136	Rc2"	265	275~325	4*M12	190
WS 100/E MZ	297	216	428	154	1095	248	179	136	Rc2"	265	275~325	4*M12	190
WS 130/E MZ	350	216	428	154	1123	276	189	136	Rc2"	265	275~325	4*M12	190
WS 150/E MZ	370	305	435	165	1127	280	189	136	Rc2"	265	275~325	4*M12	190
WS 190/E MZ	402	306	435	165	1250	372	222	150	Rc2"	320	305~368	4*M16	240
WS 250/E MZ	413	306	435	165	1250	372	222	150	Rc2"	320	305~368	4*M16	240

Firing Rates

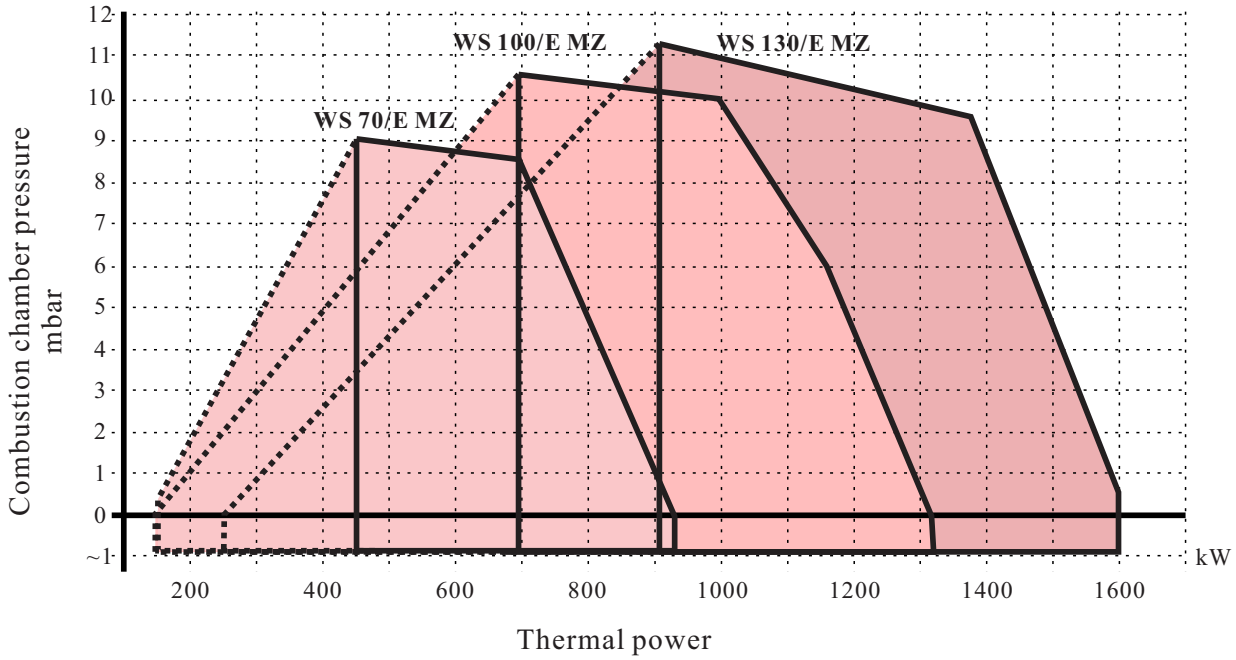

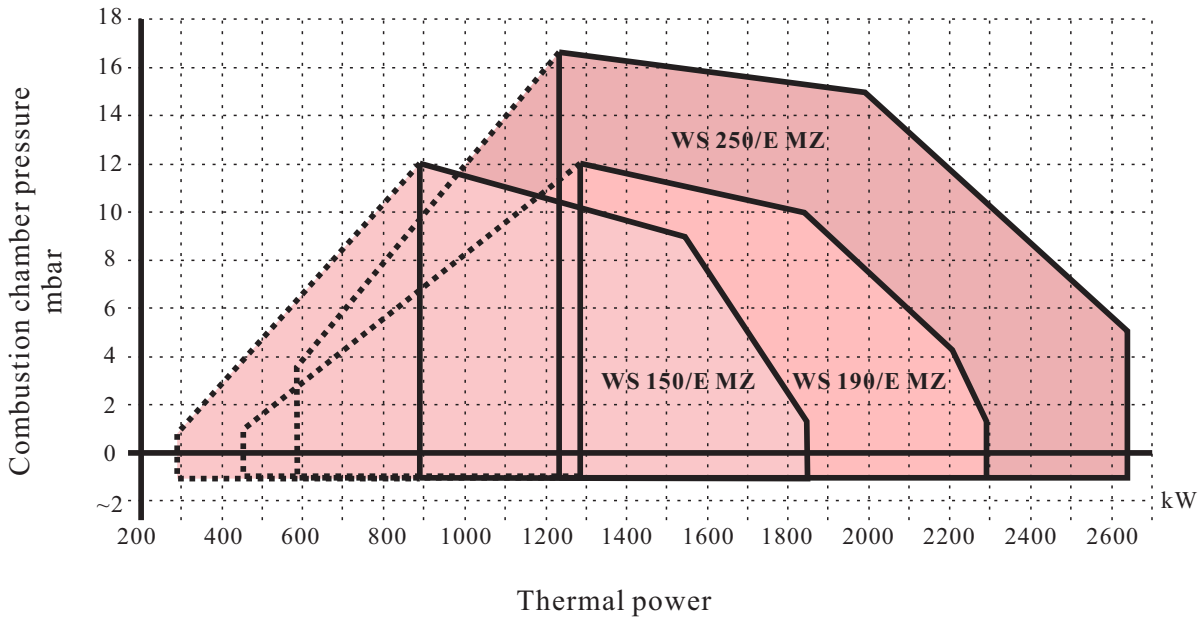

Useful firing rates for choosing the burner

Modulation range

Test condition conforming to en676
Temperature:20℃
Pressure:1013.5
Mbar altitude:0 m a.s.l

WS 68-200 BLU

Characteristics

- Two-stage progressive gas burner.
- Complies with EU standard EN676 Class 3, NOx emissions <80mg/kWh.

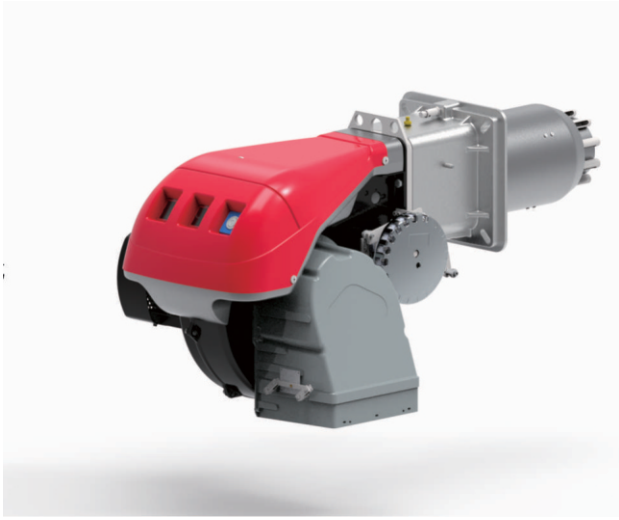

Power kW	Model	Article No.	Powe supply	Motor power kW	Package size LxPxH(mm)	Weight kg
150/350~860	WS 68 BLU	101 008 001	230V 50Hz	1.5	1400x700x650	70
300/600~1300	WS 120 BLU	101 008 002	230V 50Hz	2.2	1400x700x650	73
300/930~1860	WS 160 BLU	101 008 003	230V 50Hz	4.5	1400x1000x650	76
550/1380~2400	WS 200 BLU	101 008 004	230V 50Hz	5.5	1400x1000x650	85

*60 Hz can be cuscomized

Size

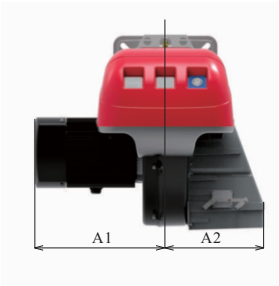

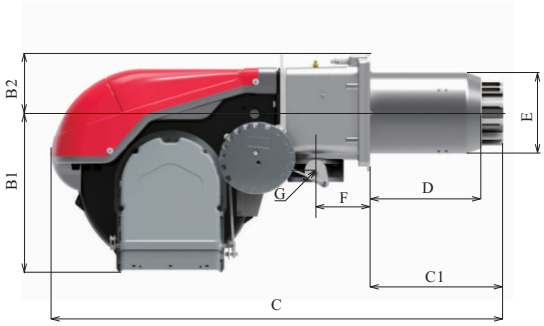

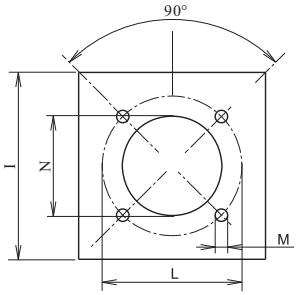

Model	A1	A2	B1	B2	C	C1	E	F	G	I	L	M	N
	mm	mm	mm	mm	mm	mm	Φmm	mm	mm	mm	Φmm	M	Φmm
WS 68 BLU	297	216	429	153	1099	253	189	136	Rc2"	265	275-325	4*M12	195
WS 120 BLU	297	216	429	153	1099	253	189	136	Rc2"	265	275-325	4*M12	195
WS 160 BLU	402	306	438	159	1240	365	222	150	DN50	320	368	4*M16	230
WS 200 BLU	402	306	438	159	1240	365	222	150	DN50	320	368	4*M16	230

Firing Rates

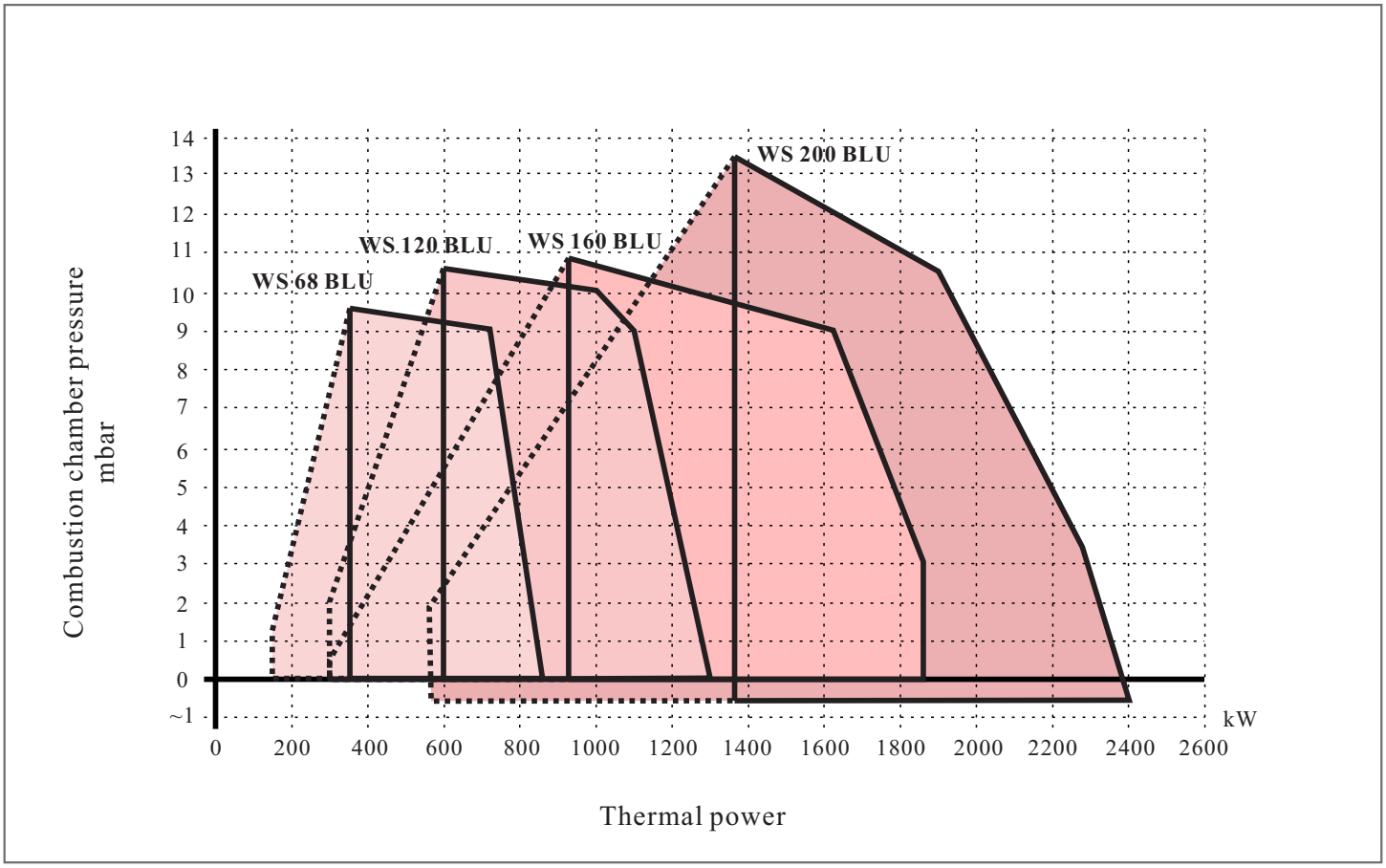

Useful firing rates for choosing the burner

Modulation range

Test condition conforming to en676
Temperature:20℃
Pressure:1013.5
Mbar altitude:0 m a.s.l

WS 68-200/M BLU

Characteristics

- Gas burner.
- Modulating operation.
- Complies with EU standard EN676 Class 3, NOx emissions <80mg/kWh.

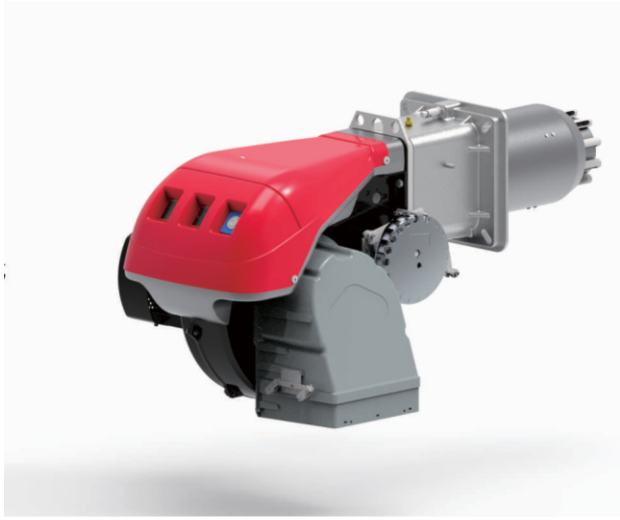

Power kW	Model	Article No.	Powe supply	Motor power kW	Package size LxPxH(mm)	Weight kg
150/350~860	WS 68/M BLU	101 003 001	230V 50Hz	1.5	1400x700x650	70
300/600~1300	WS 120/M BLU	101 003 002	230V 50Hz	2.2	1400x700x650	73
300/930~1860	WS 160/M BLU	101 003 003	230V 50Hz	4.5	1400x1000x650	76
550/1380~2400	WS 200/M BLU	101 003 004	230V 50Hz	5.5	1400x1000x650	85

*60 Hz can be cuscomized

Size

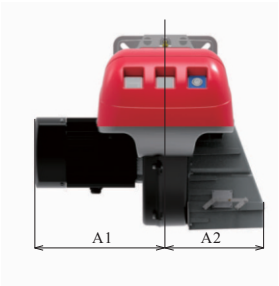

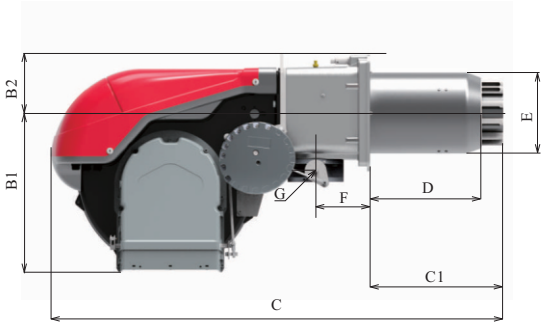

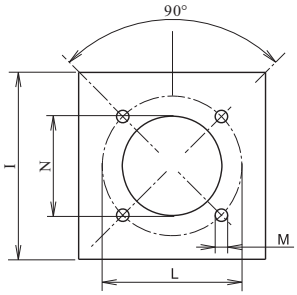

Model	A1	A2	B1	B2	C	C1	E	F	G	I	L	M	N
	mm	mm	mm	mm	mm	mm	Φmm	mm	mm	mm	Φmm	M	Φmm
WS 68/M BLU	297	216	429	153	1099	253	189	136	Rc2"	265	275~325	4*M12	195
WS 120/M BLU	297	216	429	153	1099	253	189	136	Rc2"	265	275~325	4*M12	195
WS 160/M BLU	402	306	438	159	1240	365	222	150	DN50	320	368	4*M16	230
WS 200/M BLU	402	306	438	159	1240	365	222	150	DN50	320	368	4*M16	230

Firing Rates

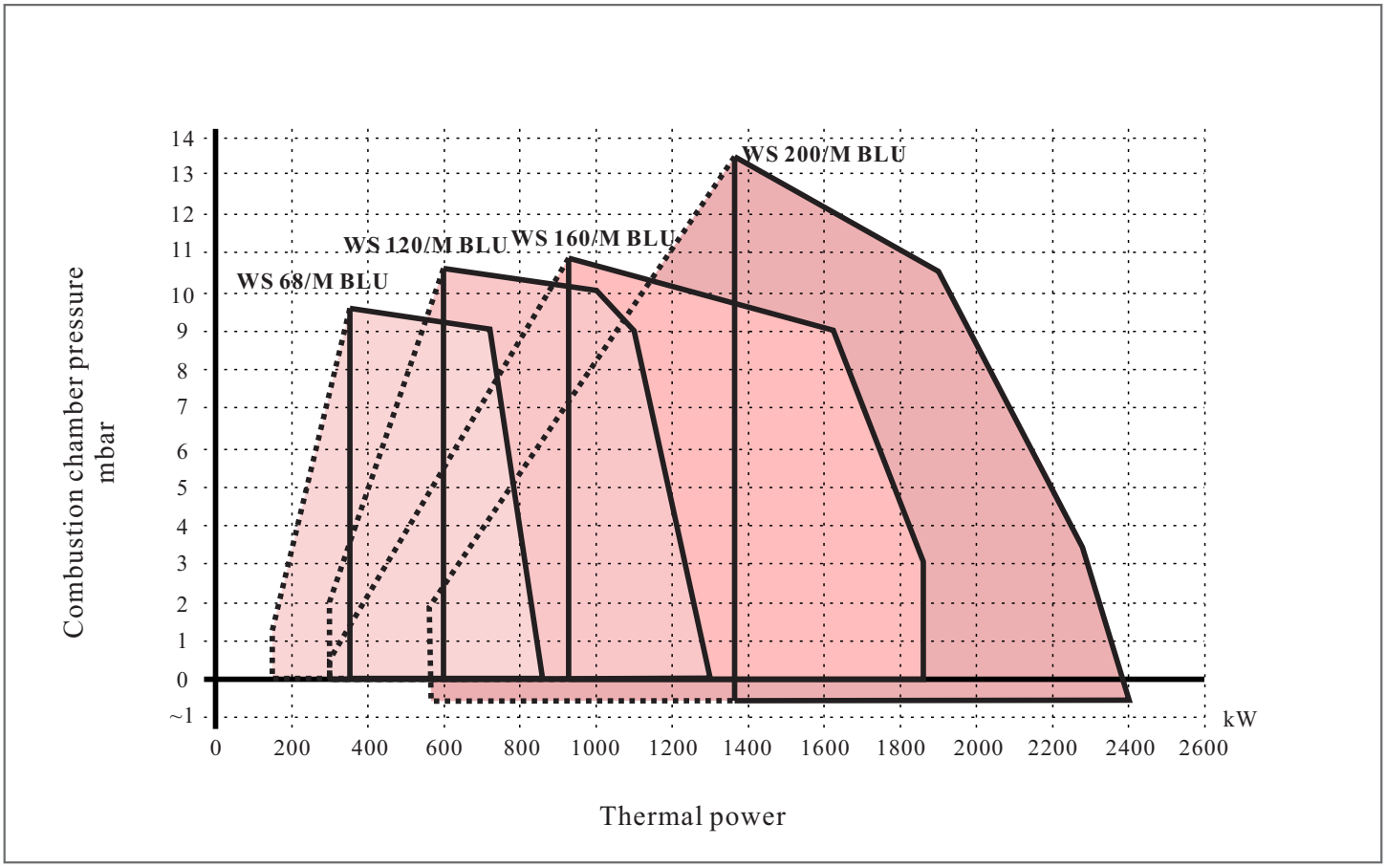

Useful firing rates for choosing the burner

Modulation range

Test condition conforming to en676
Temperature:20℃
Pressure:1013.5
Mbar altitude:0 m a.s.l

WS 68-200/E BLU

Characteristics

- The electronic cam device of regulation allows to catch up a high modulation ratio on all firing rates range.
- Electronic Modulating opertation.
- Complies with EU standard EN676 Class 3, NOx emissions <80mg/kWh.
- Different control system for option.

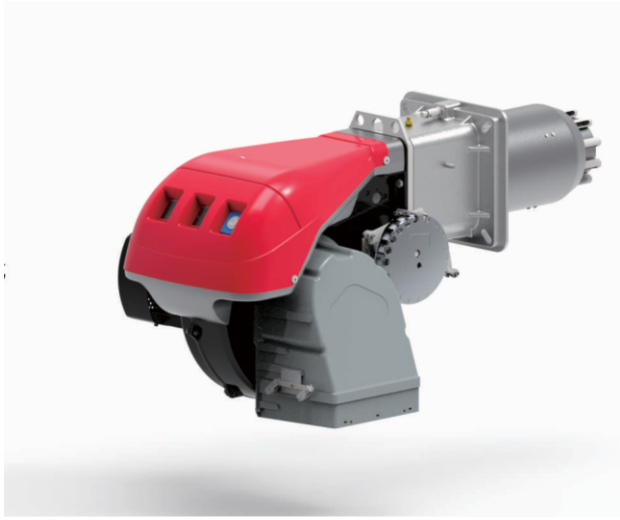

Power kW	Model	Article No.	Powe supply	Motor power kW	Package size LxPxH(mm)	Weight kg
150/350~860	WS 68/E BLU	101 003 005	230V 50Hz	1.5	1400x700x650	70
300/600~1300	WS 120/E BLU	101 003 006	230V 50Hz	2.2	1400x700x650	73
300/930~1860	WS 160/E BLU	101 003 007	230V 50Hz	4.5	1400x1000x650	76
550/1380~2400	WS 200/E BLU	101 003 008	230V 50Hz	5.5	1400x1000x650	85

*60 Hz can be cuscomized

Size

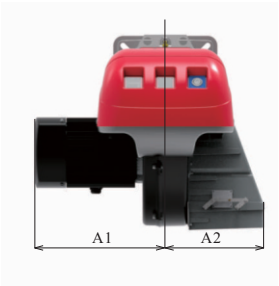

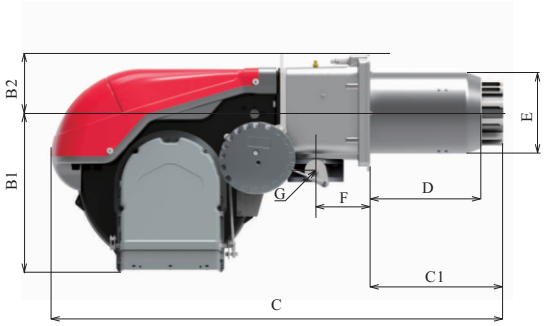

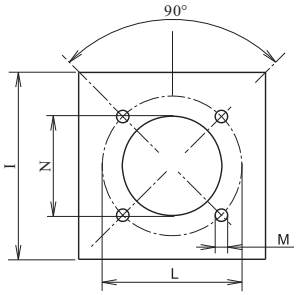

Model	A1	A2	B1	B2	C	C1	E	F	G	I	L	M	N
	mm	mm	mm	mm	mm	mm	Φmm	mm	mm	mm	Φmm	M	Φmm
WS 68/E BLU	297	216	429	153	1099	253	189	136	Rc2"	265	275~325	4*M12	195
WS 120/ E BLU	297	216	429	153	1099	253	189	136	Rc2"	265	275~325	4*M12	195
WS 160/E BLU	402	306	438	159	1240	365	222	150	DN50	320	368	4*M16	230
WS 200/E BLU	402	306	438	159	1240	365	222	150	DN50	320	368	4*M16	230

Firing Rates

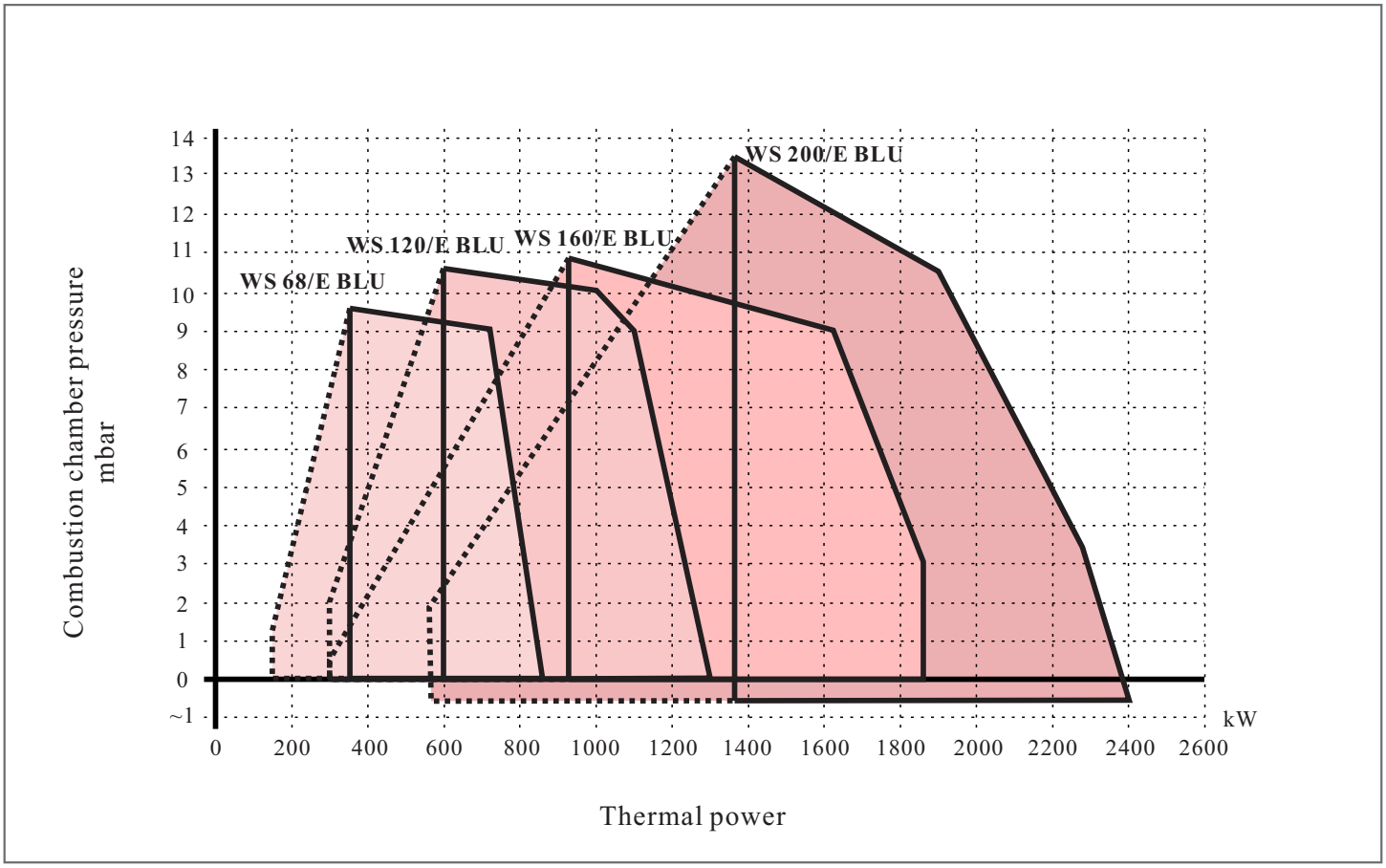

Useful firing rates for choosing the burner

Modulation range

Test condition conforming to en676
Temperature:20℃
Pressure:1013.5
Mbar altitude:0 m a.s.l

WS 310-610/M BLU

Characteristics

- Gas burner.
- Modulating opertaion.
- Complies with EU standard EN676 Class 3, NOx emissions <80mg/kWh.

Power kW	Model	Article No.	Powe supply	Motor power kW	Package size LxPxH(mm)	Weight kg
400/1200~3630	WS 310/M BLU	101 004 001	230V 50Hz	7.5	1820x1120x880	250
500/1500~4450	WS 410/M BLU	101 004 002	230V 50Hz	9.2	1820x1120x880	250
680/1800~5250	WS 510/M BLU	101 004 003	230V 50Hz	12	1820x1120x880	250
1000/2200~6250	WS 610/M BLU	101 004 004	230V 50Hz	15	1820x1120x880	280

*60 Hz can be cuscomized

Size

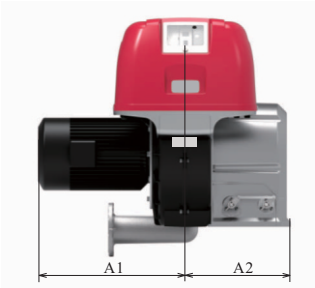

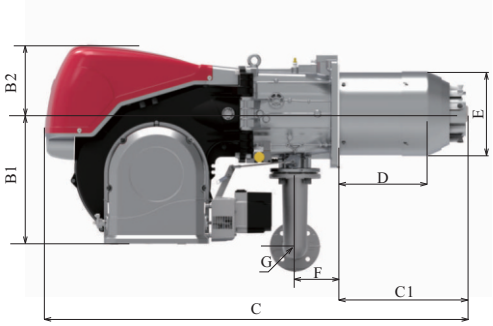

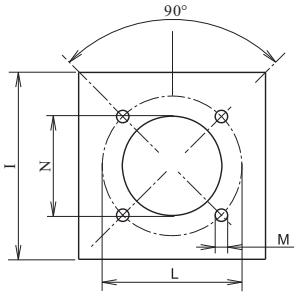

Model	A1	A2	B1	B2	C	C1	E	F	G	I	L	M	N
	mm	mm	mm	mm	mm	mm	Φmm	mm	mm	mm	Φmm	M	Φmm
WS 310/M BLU	555	400	528	275	1648	465	305	178	DN65	400	452	4*M20	335
WS 410/M BLU	555	400	528	275	1691	516	312	178	DN65	400	452	4*M20	335
WS 510/M BLU	555	400	528	275	1698	516	321	178	DN65	400	452	4*M20	335
WS 610/M BLU	555	400	528	275	1698	516	336	178	DN65	400	452	4*M20	335

Firing Rates

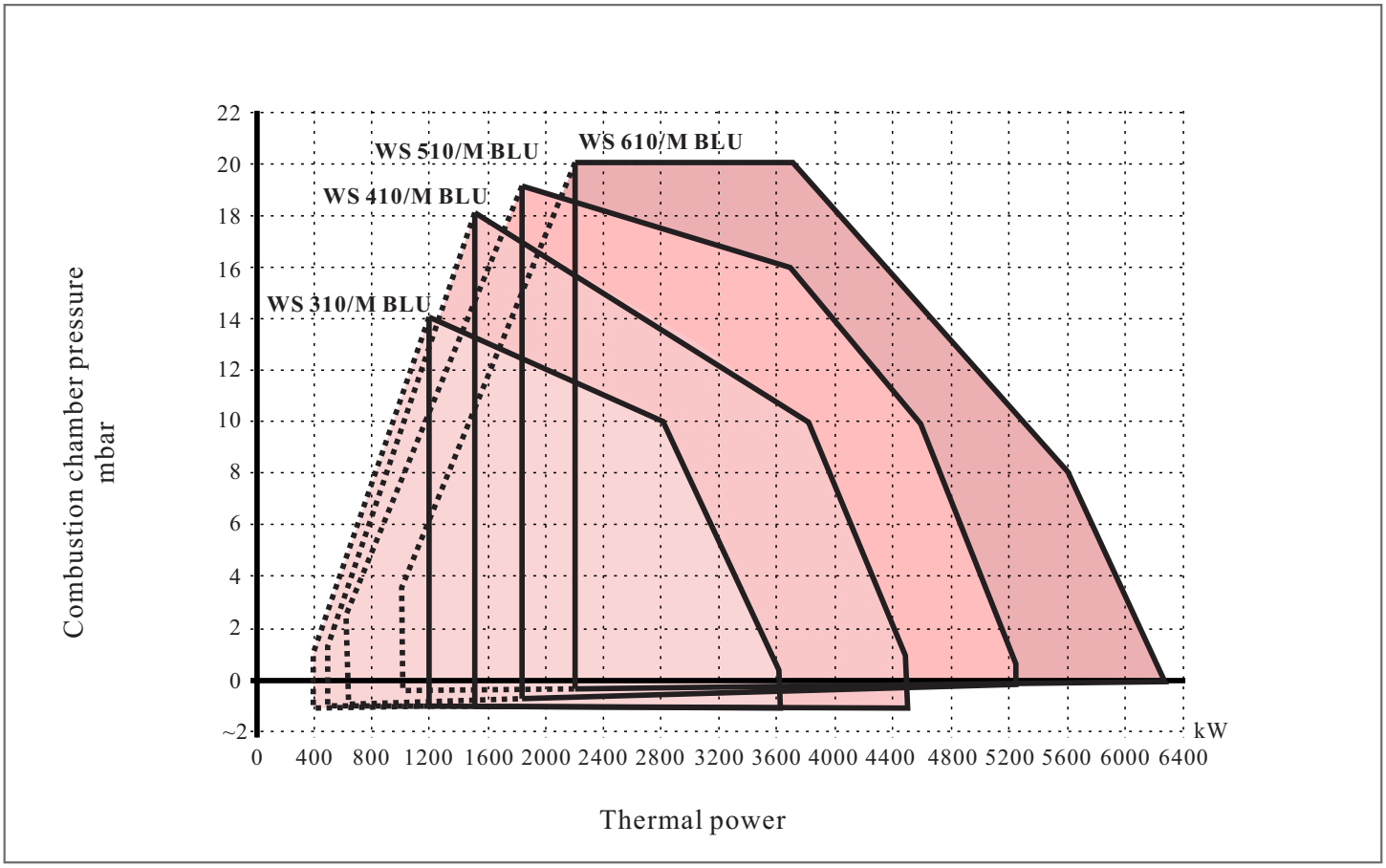

Useful firing rates for choosing the burner

Modulation range

Test condition conforming to en676
Temperature:20℃
Pressure:1013.5
Mbar altitude:0 m a.s.l

WS 310-610/E BLU

Characteristics

- The electronic cam device of regulation allows to catch up a high modulation ratio on all firing rates range.
- Electronic Modulating operation.
- Complies with EU standard EN676 Class 3, NOx emissions <80mg/kWh.
- Different control system for option.

Power kW	Model	Article No.	Powe supply	Motor power kW	Package size LxPxH(mm)	Weight kg
500/1350~3800	WS 310/E BLU	101 005 001	230V 50Hz	7.5	1820x1120x880	250
950/1830~4590	WS 410/E BLU	101 005 002	230V 50Hz	9.2	1820x1120x880	250
1000/2500~5170	WS 510/E BLU	101 005 003	230V 50Hz	12	1820x1120x880	250
1410/3000~6500	WS 610/E BLU	101 005 004	230V 50Hz	15	1820x1120x880	280

*60 Hz can be cuscomized

Size

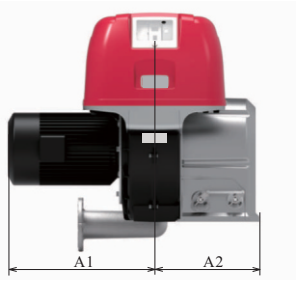

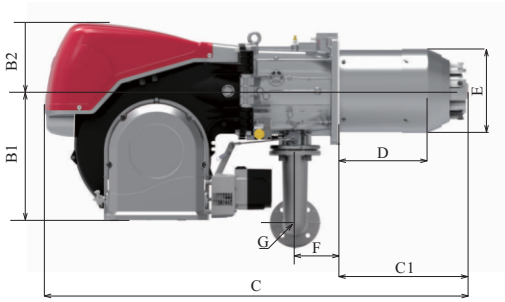

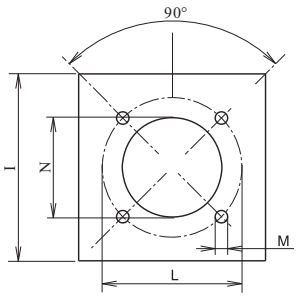

Model	A1	A2	B1	B2	C	C1	E	F	G	I	L	M	N
	mm	mm	mm	mm	mm	mm	Φmm	mm	mm	mm	Φmm	M	Φmm
WS 310/E BLU	555	400	528	275	1648	465	305	178	DN65	400	452	4*M20	335
WS 410/E BLU	555	400	528	275	1691	516	312	178	DN65	400	452	4*M20	335
WS 510/E BLU	555	400	528	275	1698	516	321	178	DN65	400	452	4*M20	335
WS 610/E BLU	555	400	528	275	1698	516	336	178	DN65	400	452	4*M20	350

Firing Rates

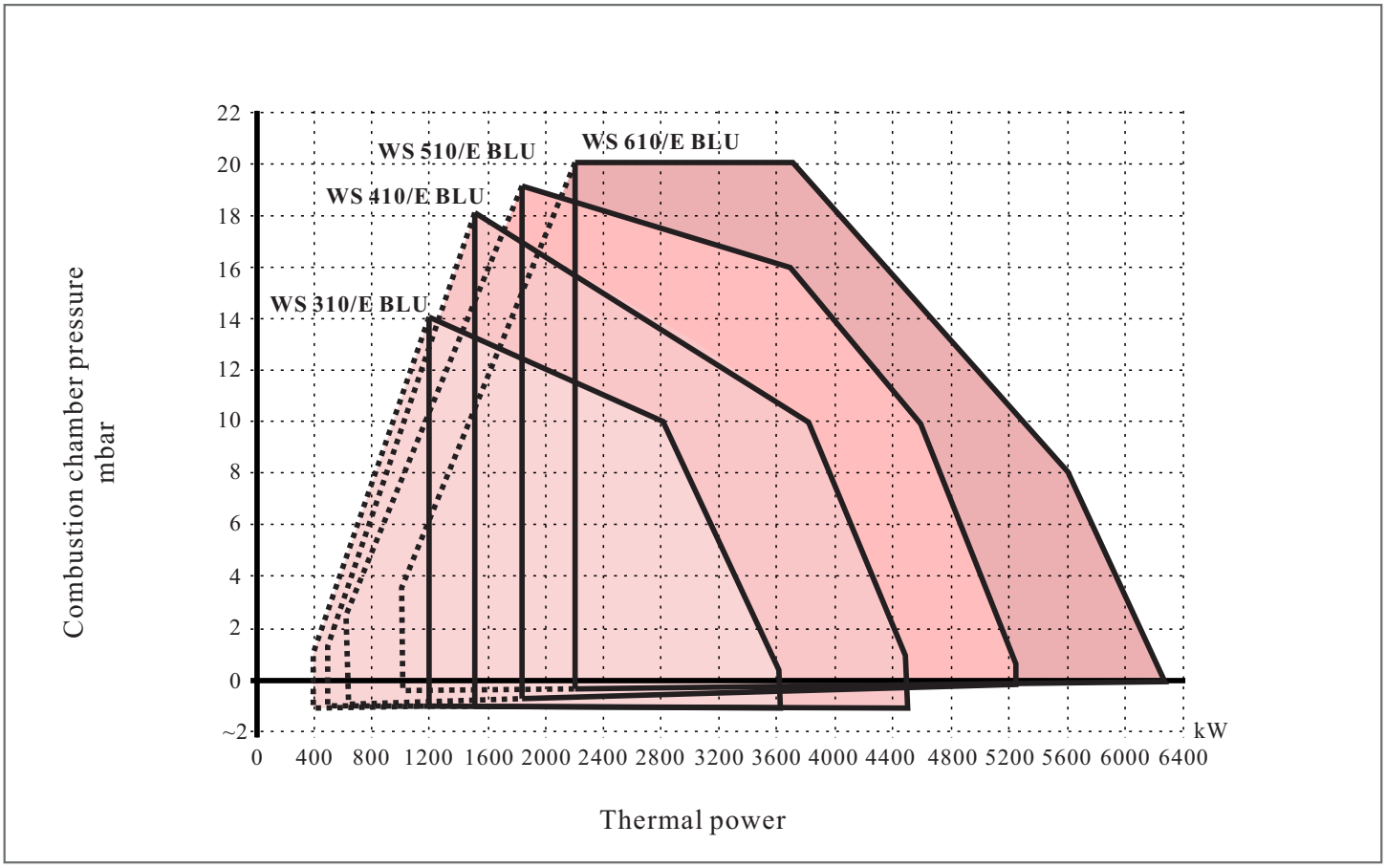

Useful firing rates for choosing the burner

Modulation range

Test condition conforming to en676
Temperature:20℃
Pressure:1013.5
Mbar altitude:0 m a.s.l

WS 810-1200/M BLU

Characteristics

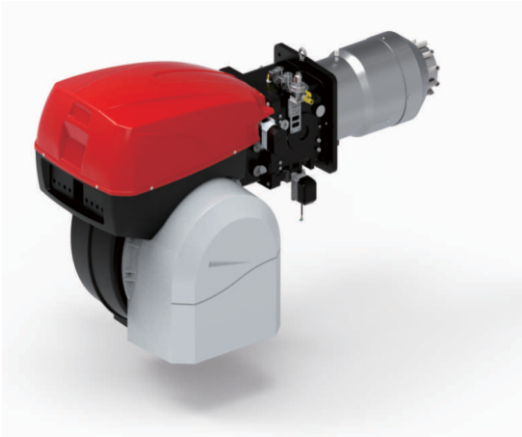

- The electronic cam device of regulation allows to catch up a high modulation ratio on all firing rates range.
- Modulating operation.
- Complies with EU standard EN676 Class 3, NOx emissions <80mg/kWh.
- Different control system for option.

Power kW	Model	Article No.	Powe supply	Motor power kW	Package size LxPxH(mm)	Weight kg
1200/3500~8000	WS 810/M BLU	101 005 005	230V 50Hz	22	1820x1120x880	250
1100/4000~10100	WS 1000/M BLU	101 005 006	230V 50Hz	22	1820x1120x880	250
1500/5500~11100	WS 1200/M BLU	101 005 007	230V 50Hz	25	1820x1120x880	250

*60 Hz can be cuscomized

Size

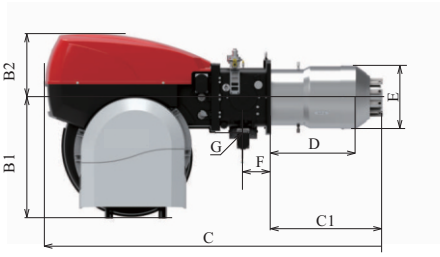

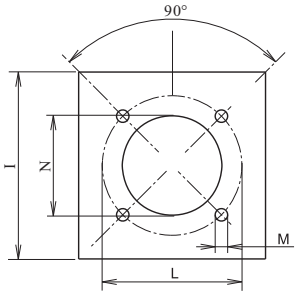

Model	A1	A2	B1	B2	C	C1	E	F	G	I	L	M	N
	mm	mm	mm	mm	mm	mm	Φmm	mm	mm	mm	Φmm	M	Φmm
WS 810/M BLU	643	644	575	303	1935	574~750	363	181	DN80	500	495	4*M18	380
WS 1000/M BLU	774	975	875	463	2296~2446	657~807	413	200	DN80	548	608	4*M20	420
WS 1200/M BLU	774	975	875	463	2296~2446	657~807	456	200	DN80	548	608	4*M20	470

Firing Rates

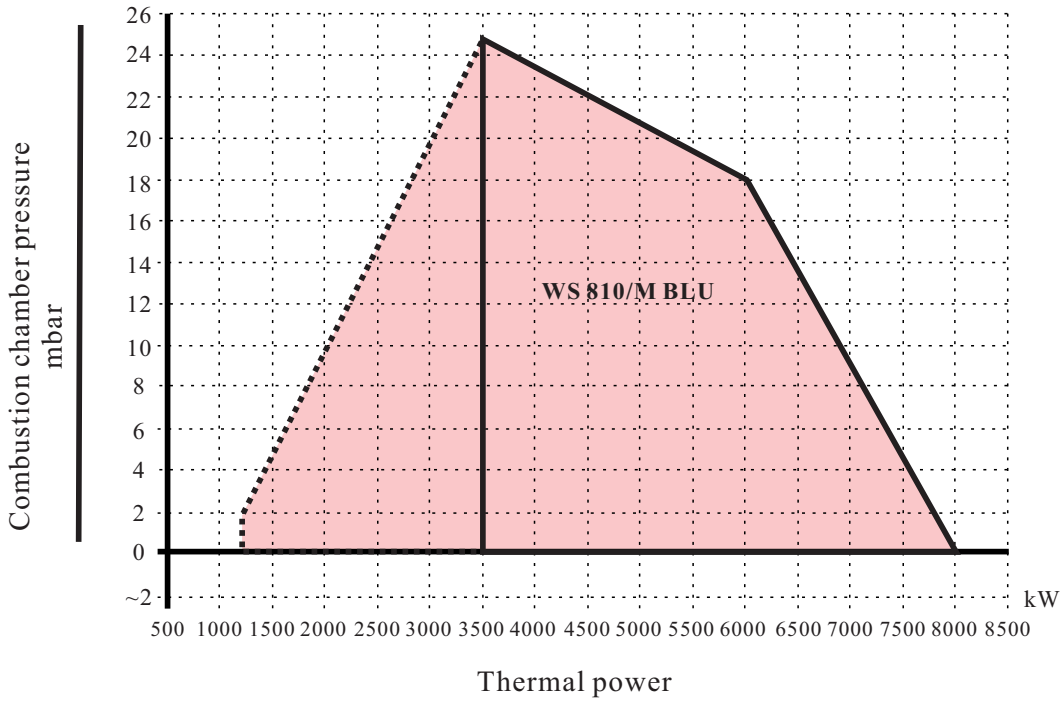

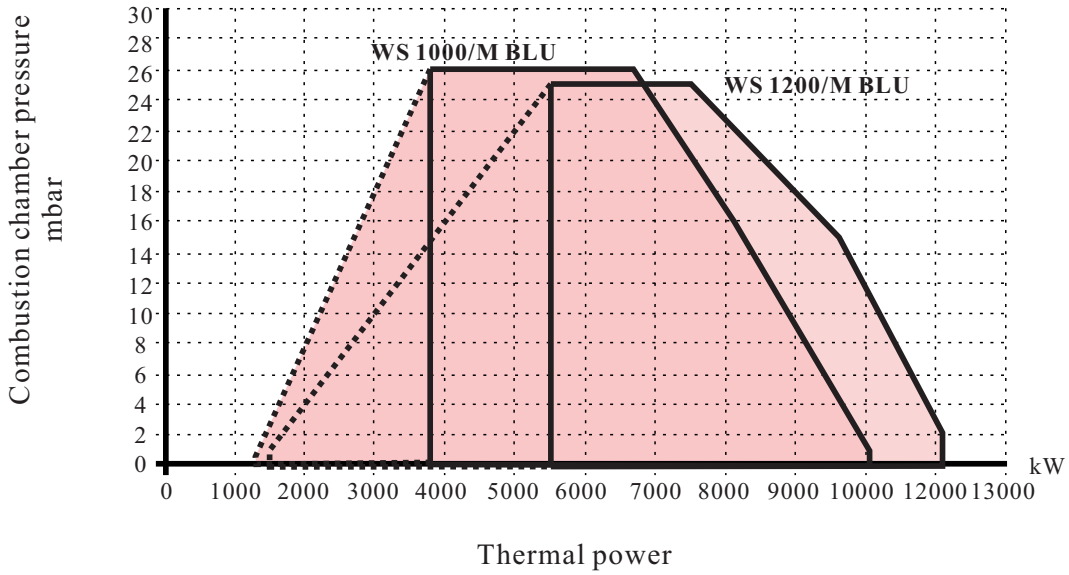

Useful firing rates for choosing the burner

Modulation range

Test condition conforming to en676
Temperature:20℃
Pressure:1013.5
Mbar altitude:0 m a.s.l

WS 810-1200/E BLU

Characteristics

- The electronic cam device of regulation allows to catch up a high modulation ratio on all firing rates range.
- Electronic modulating operation.
- Complies with EU standard EN676 Class 3, NOx emissions <80mg/kWh.
- Different control system for option.

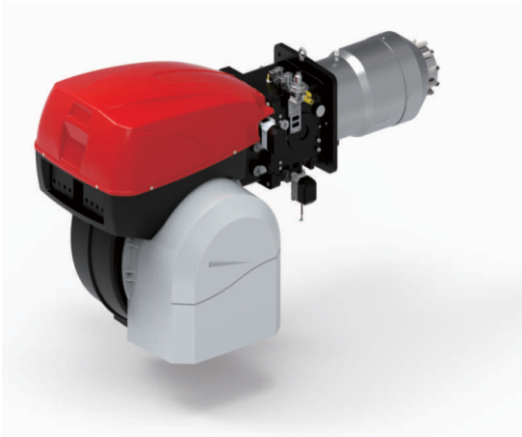

Power kW	Model	Article No.	Powe supply	Motor power kW	Package size LxPxH(mm)	Weight kg
1200/3500~8000	WS 810/M BLU	101 005 008	230V 50Hz	22	1820x1120x880	250
1100/4000~10100	WS 1000/M BLU	101 005 009	230V 50Hz	22	1820x1120x880	250
1500/5500~11100	WS 1200/M BLU	101 005 010	230V 50Hz	25	1820x1120x880	250

*60 Hz can be cuscomized

Size

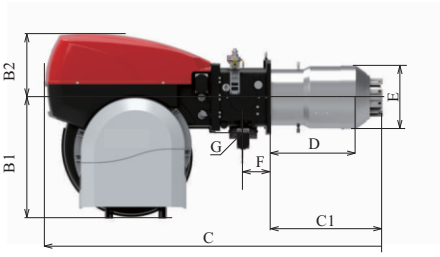

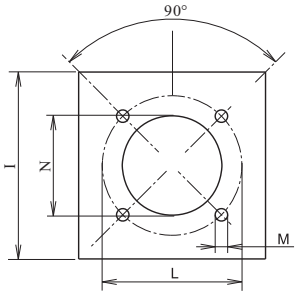

Model	A1	A2	B1	B2	C	C1	E	F	G	I	L	M	N
	mm	mm	mm	mm	mm	mm	Φmm	mm	mm	mm	Φmm	M	Φmm
WS 810/E BLU	643	644	575	303	1935	574~750	363	181	DN80	500	495	4*M18	380
WS 1000/E BLU	774	975	875	463	2296~2446	657~807	413	200	DN80	548	608	4*M20	420
WS 1200/E BLU	774	975	875	463	2296~2446	657~807	456	200	DN80	548	608	4*M20	470

Firing Rates

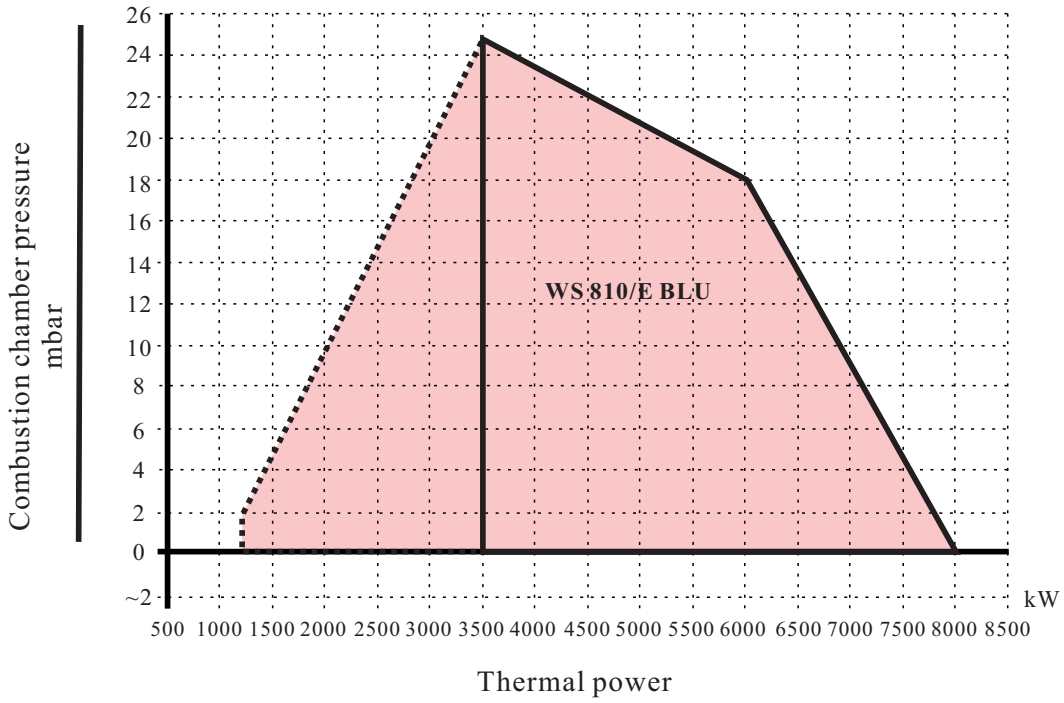

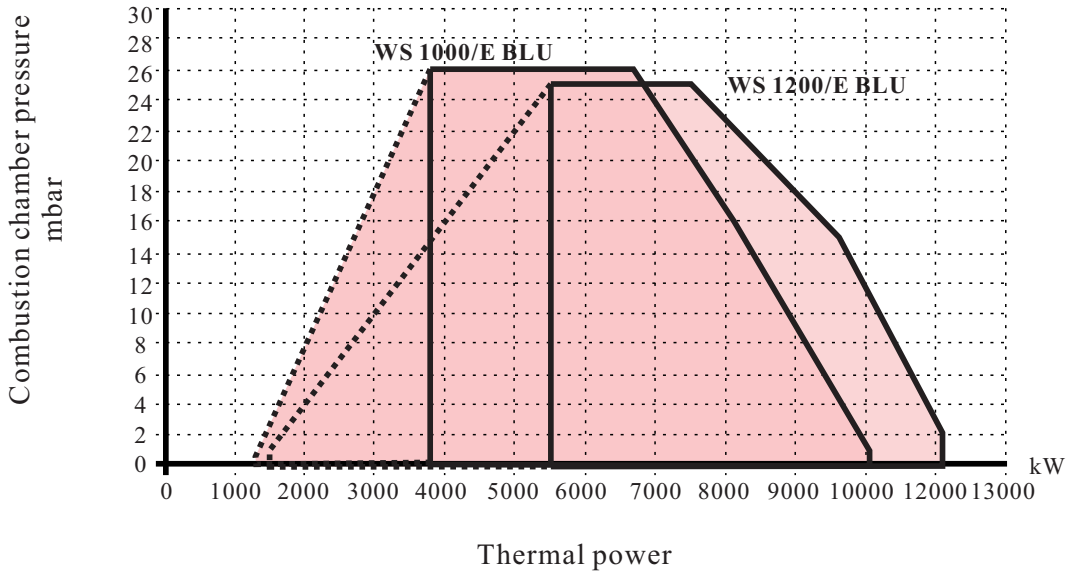

Useful firing rates for choosing the burner

Modulation range

Test condition conforming to en676
Temperature:20℃
Pressure:1013.5
Mbar altitude:0 m a.s.l

WS 68-200/E FGR

Characteristics

- Electronic modulating gas burners with electronic cam.
- Ultra Low NOx emissions (NOx emissions <30mg/kWh.).
- Suitable for new installations or replacements.
- Operation as standard air draught burners.
- Different control system for option.

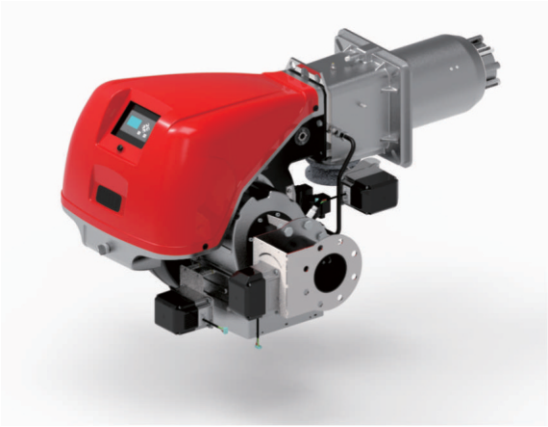

Power kW	Model	Article No.	Powe supply	Motor power kW	Package size LxPxH(mm)	Weight kg
195/350~880	WS 68/E FGR	101 009 005	230V 50Hz	1.5	1500x1000x750	70
300/600~1180	WS 120/E FGR	101 009 006	230V 50Hz	2.2	1500x1000x750	73
350/900~1850	WS 160/E FGR	101 009 007	230V 50Hz	4.5	1500x1000x750	76
400/1400~2200	WS 200/E FGR	101 009 008	230V 50Hz	5.5	1500x1000x750	85

*60 Hz can be cuscomized

Size

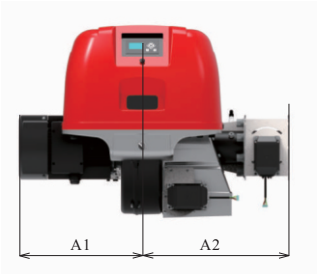

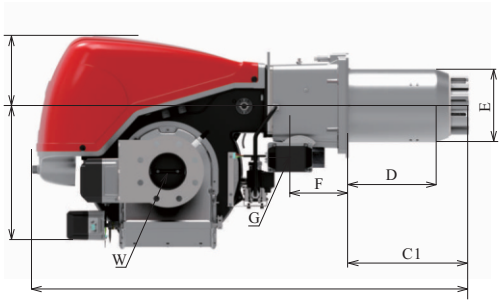

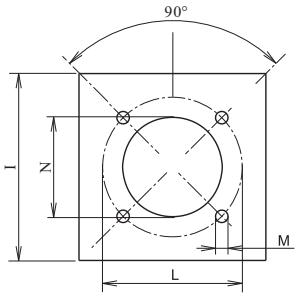

Model	A1	A2	B1	B2	C	C1	E	F	G	I	L	M	N	W
	mm	mm	mm	mm	mm	mm	Φmm	mm	mm	mm	Φmm	M	Φmm	mm
WS 68/E FGR	350	423	428	215	1322	390	189	137	Rc2"	265	275-325	4*M12	195	DN65
WS 120/E FGR	350	423	428	215	1322	390	189	137	Rc2"	265	275-325	4*M12	195	DN65
WS 160/E FGR	413	497	437	214	1326	500	222	150	Rc2"	320	375-369	4*M16	240	DN80
WS 200/E FGR	413	497	437	214	1326	500	222	150	Rc2"	320	375-369	4*M16	240	DN100

Firing Rates

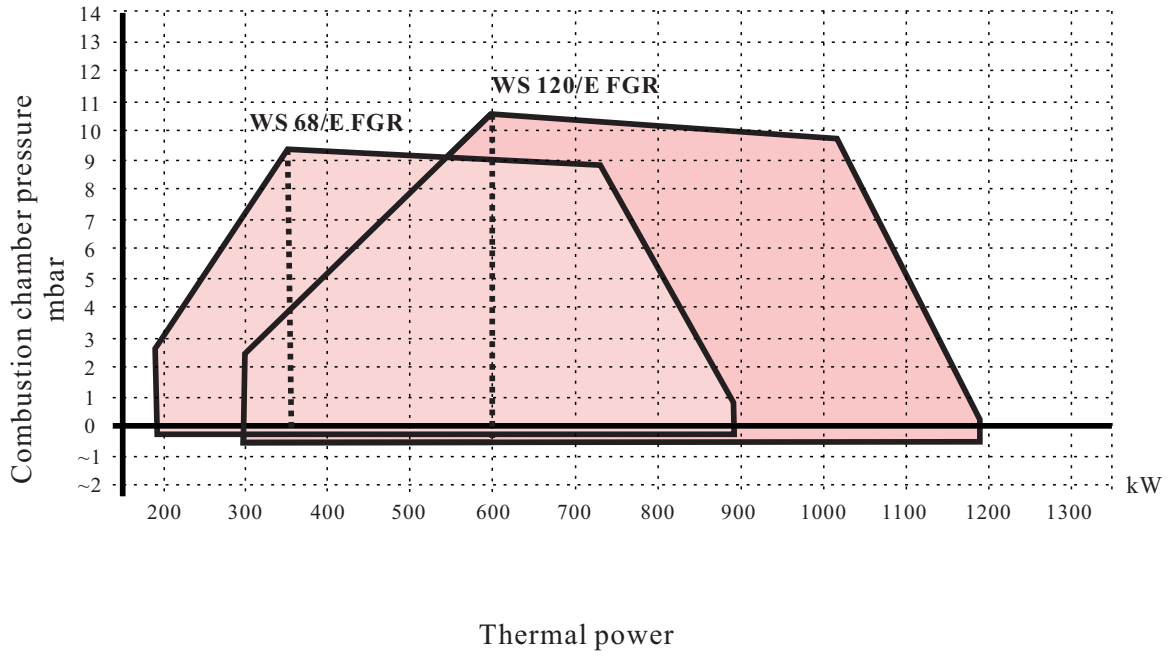

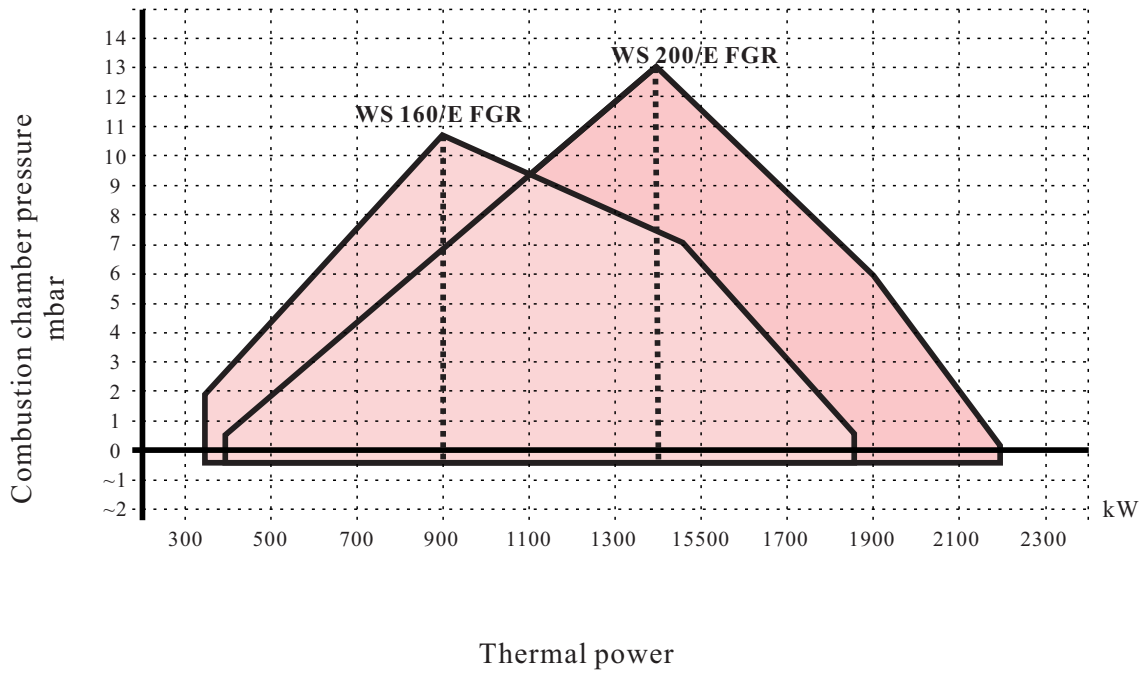

Useful firing rates for choosing the burner

Modulation range

Test condition conforming to en676
Temperature:20℃
Pressure:1013.5
Mbar altitude:0 m a.s.l

WS 310-610/E FGR

Characteristics

- Electronic modulating gas burners with electronic cam.
- Ultra Low NOx emissions (NOx emissions <30mg/kWh.).
- Suitable for new installations or replacements.
- Operation as standard air draught burners.
- Different control system for option.

Power kW	Model	Article No.	Powe supply	Motor power kW	Package size LxPxH(mm)	Weight kg
400/1200~3630	WS 310/E FGR	101 009 009	230V 50Hz	7.5	2080x1300x1000	265
500/1500~4450	WS 410/E FGR	101 009 010	230V 50Hz	9.2	2080x1300x1000	265
680/1800~5250	WS 510/E FGR	101 009 011	230V 50Hz	12	2080x1300x1000	265
1000/2200~6250	WS 610/E FGR	101 009 012	230V 50Hz	15	2080x1300x1000	265

*60 Hz can be cuscomized

Size

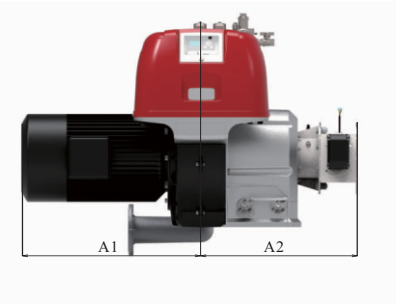

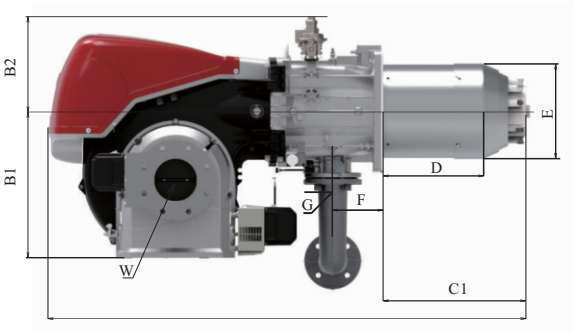

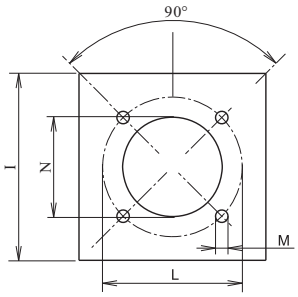

Model	A1	A2	B1	B2	C	C1	E	F	G	I	L	M	N	W
	mm	mm	mm	mm	mm	mm	Φmm	mm	mm	mm	Φmm	M	Φmm	mm
WS 310/E FGR	622	555	519	334	1822	700	306	178	DN65	431	452	4*M16	355	DN100
WS 410/E FGR	622	555	519	334	1822	700	313	178	DN65	431	452	4*M16	355	DN100
WS 510/E FGR	622	555	519	334	1822	700	313	178	DN65	431	452	4*M16	355	DN125
WS 610/E FGR	622	555	519	334	1822	700	336	178	DN65	431	452	4*M16	355	DN150

Firing Rates

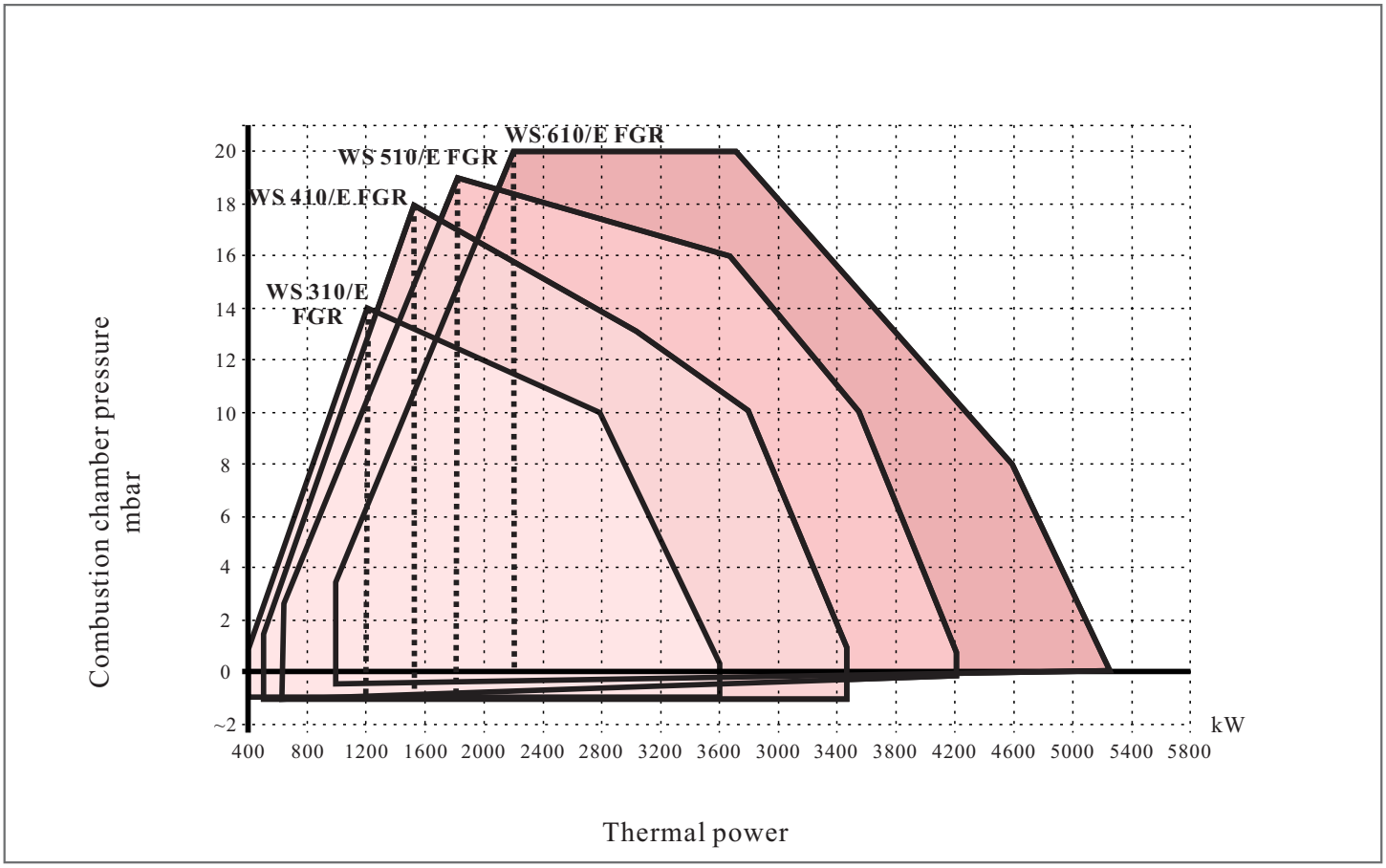

Useful firing rates for choosing the burner

Modulation range

Test condition conforming to en676
Temperature:20℃
Pressure:1013.5
Mbar altitude:0 m a.s.l

WS 810-1200/E FGR

Characteristics

- Electronic modulating gas burners with electronic cam.
- Ultra Low NOx emissions (NOx emissions <30mg/kWh.).
- Suitable for new installations or replacements.
- Operation as standard air draught burners.
- Different control system for option.

Power kW	Model	Article No.	Powe supply	Motor power kW	Package size LxPxH(mm)	Weight kg
1100/3500~7000	WS 810/E FGR	101 009 013	230V 50Hz	22	1820x1120x880	200
1100/4000~10100	WS 1010/E FGR	101 009 014	230V 50Hz	22	1820x1120x880	250
1500/5500~11100	WS 1200/E FGR	101 009 015	230V 50Hz	25	1820x1120x880	250

*60 Hz can be cuscomized

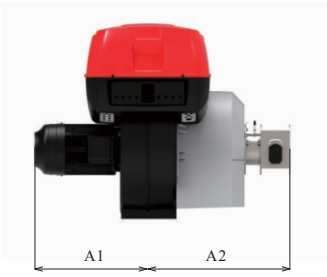

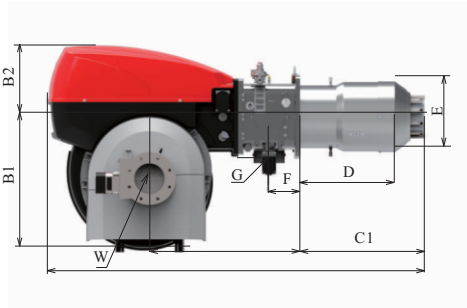

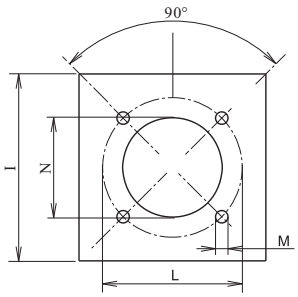

Model	A1	A2	B1	B2	C	C1	E	F	G	I	L	M	N	W
	mm	mm	mm	mm	mm	mm	Φmm	mm	mm	mm	Φmm	M	Φmm	mm
WS 810/E FGR	643	644	575	303	1935	574~750	363	181	DN80	500	495	4*M18	380	DN150

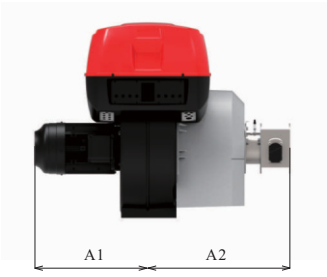

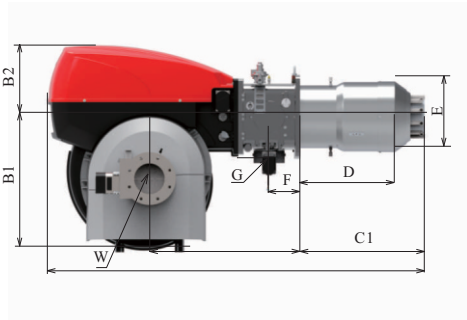

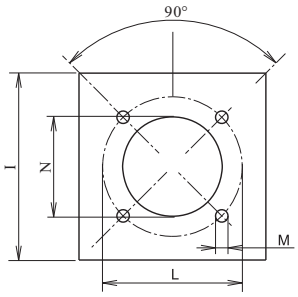

Model	A1	A2	B1	B2	C	C1	E	F	G	I	L	M	N	W
	mm	mm	mm	mm	mm	mm	Φmm	mm	mm	mm	Φmm	M	Φmm	mm
WS 1000/E FGR	774	975	875	463	2296~2446	657~807	413	200	DN80	548	608	4*M20	420	DN200
WS 1200/E FGR	774	975	875	463	2296~2446	657~807	456	200	DN80	548	608	4*M20	470	DN200

Firing Rates

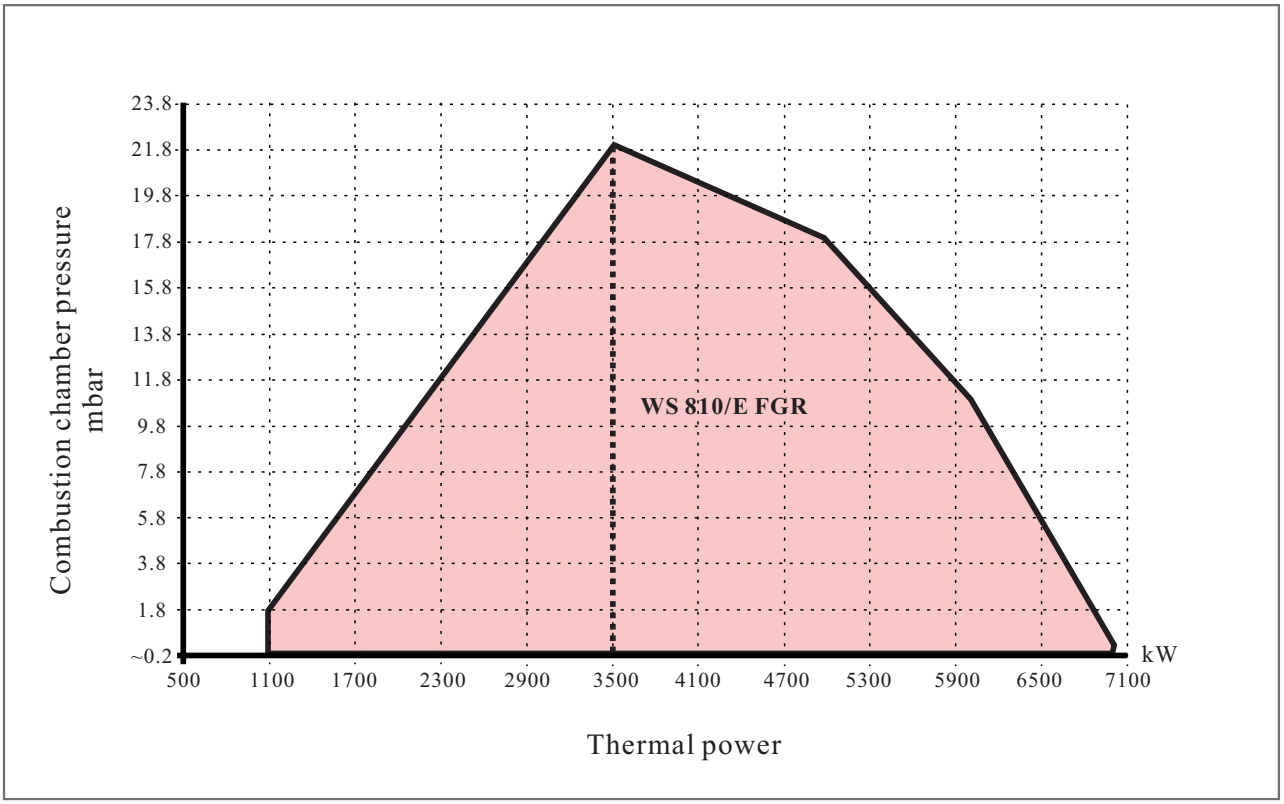

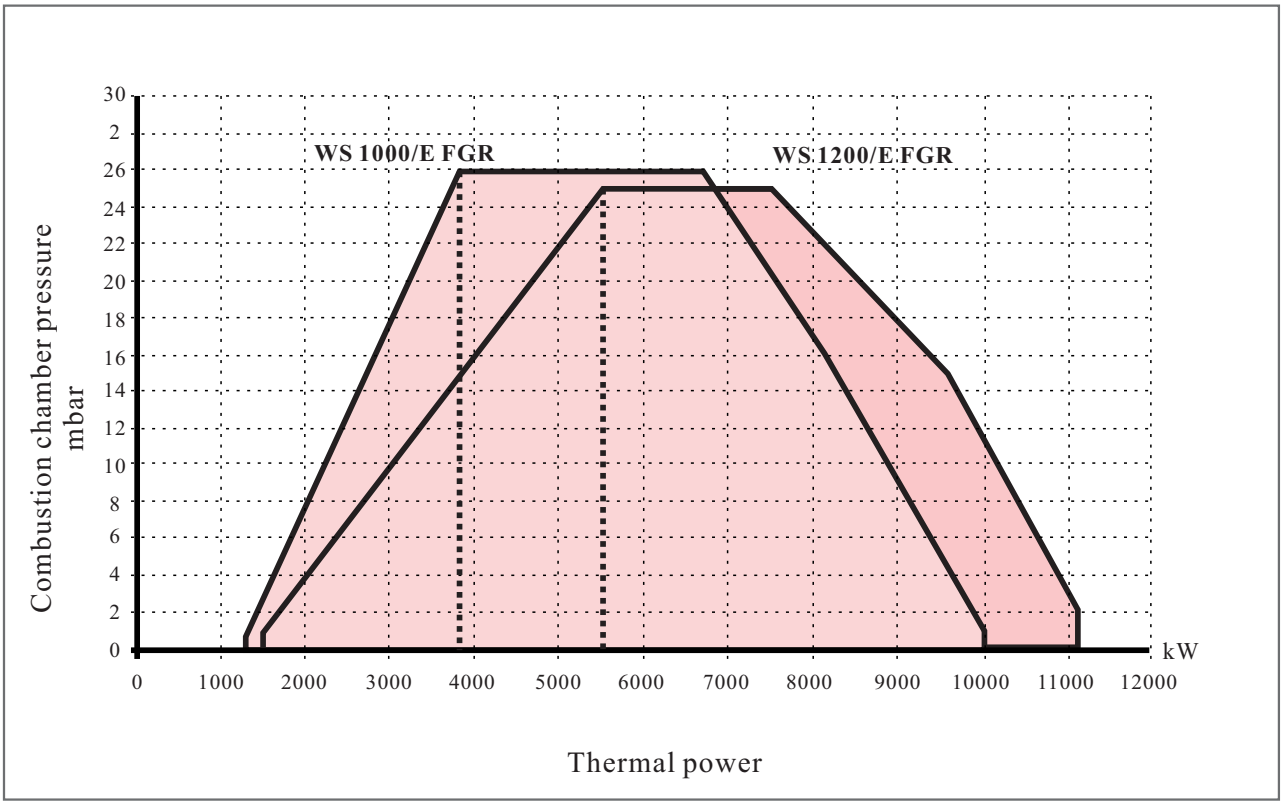

Useful firing rates for choosing the burner

Modulation range

Test condition conforming to en676
Temperature:20℃
Pressure:1013.5
Mbar altitude:0 m a.s.l

WX25-40G/GE

Characteristics

- Single stage operation/electronic proportional adjustment operation.
- Metal fiber surface burning, burning evenly.
- Pre-mix gas and air.
- Full premixed combustion, fast combustion speed, short flame, inhibit Ngeneration.
- The minimum NOx emission can reach 18mg/m3.

Power kW	Model	Article No.	Powe supply	Motor power kW	Package size LxPxH(mm)	Weight kg
170~300	WX25G	202 22 119	230V 50Hz	0.45	810x430x465 1020x270x260	36.5
170~300	WX25GE	202 22 121	230V 50Hz	0.45	810x430x465 1020x270x260	36.5
200~400	WX40G	202 22 120	230V 50Hz	0.45	810x430x465 1020x270x260	49
120~400	WX40GE	202 22 111	230V 50Hz	0.45	810x430x465 1020x270x260	49

*60 Hz can be cuscomized

Size

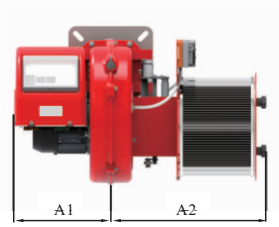

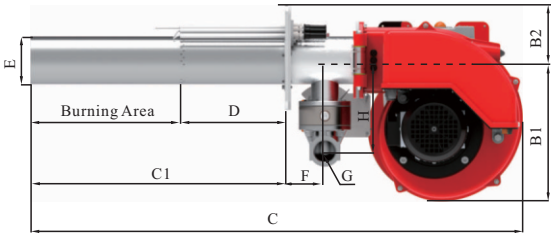

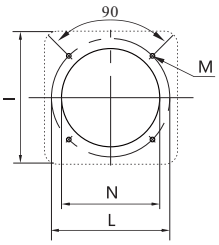

Model	A1	A2	B1	B2	C	C1	D	E	F	G	H	I	L	M	N
	mm	mm	mm	mm	mm	mm	mm	Φmm	mm	mm	mm	mm	Φmm	M	Φmm
WX25G	255	465	297	117	1135	630	300	100	84	G1½"	96	220.5	218-260	4*M10	140
WX25GE	255	465	297	117	1135	630	300	100	84	G1½"	96	220.5	218-260	4*M10	140
WX40G	255	465	297	117	1270	765	300	100	84	G1½"	96	220.5	218-260	4*M10	140
WX40GE	255	465	297	117	1270	765	300	100	84	G1½"	96	220.5	218-260	4*M10	140

Firing Rates

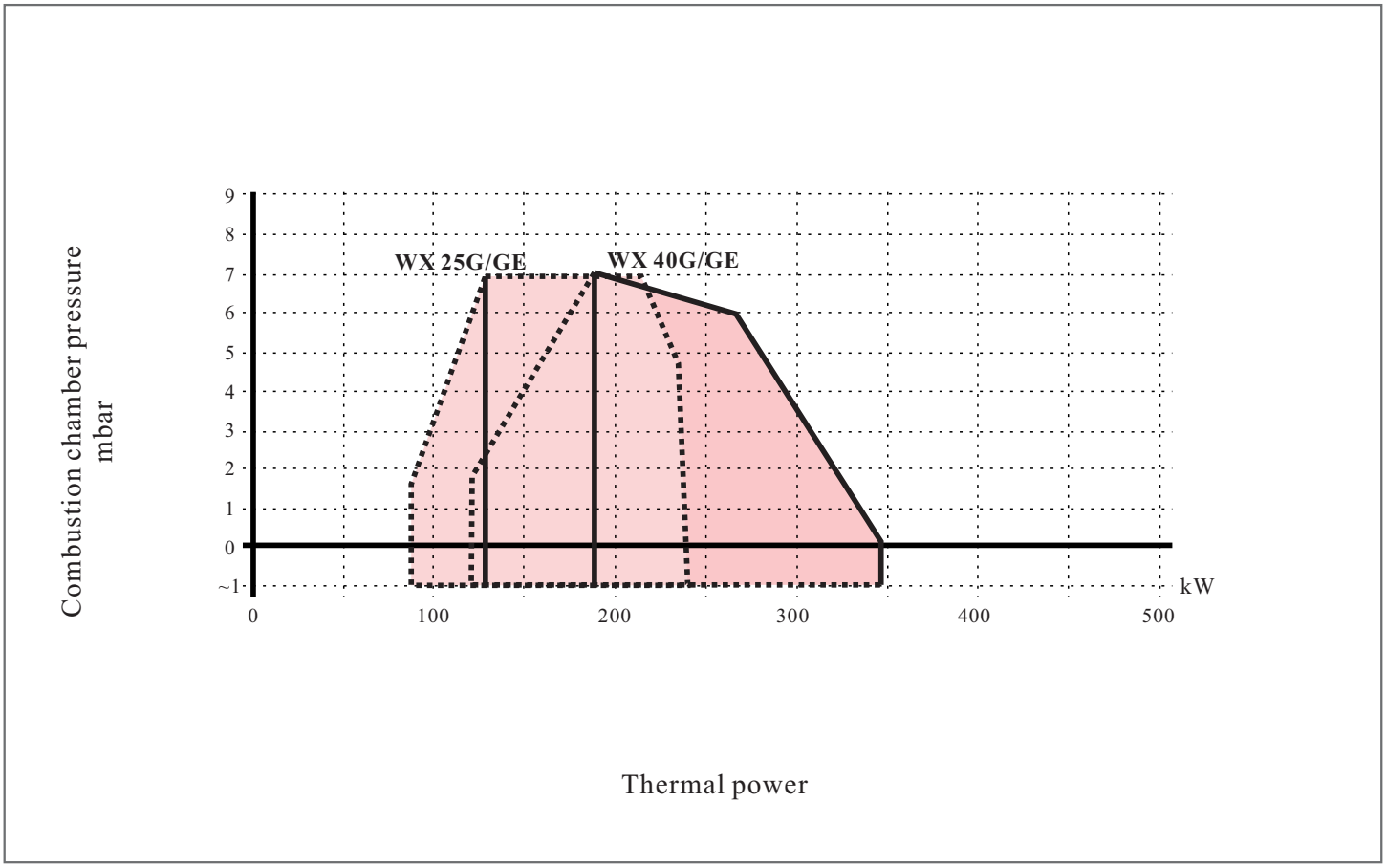

Useful firing rates for choosing the burner

Modulation range

Test condition conforming to en676
Temperature:20℃
Pressure:1013.5
Mbar altitude:0 m a.s.l

WX85-120G/GE

Characteristics

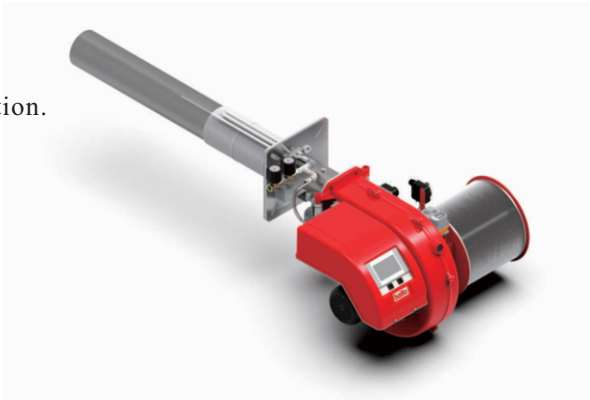

- Single stage operation/electronic proportional adjustment operation.
- Metal fiber surface burning, burning evenly.
- Pre-mix gas and air.
- Full premixed combustion, fast combustion speed, short flame, inhibit Ngeneration.
- The minimum NOx emission can reach 18mg/m3.

Power kW	Model	Article No.	Powe supply	Motor power kW	Package size LxPxH(mm)	Weight kg
300~850	WX85G	202 22 112	230V 50Hz	1.5	1030x640x735 1590x560x605	120.5
300~1100	WX120GE	202 22 113	230V 50Hz	2.2	1030x640x735 1590x560x605	125

*60 Hz can be cuscomized

Size

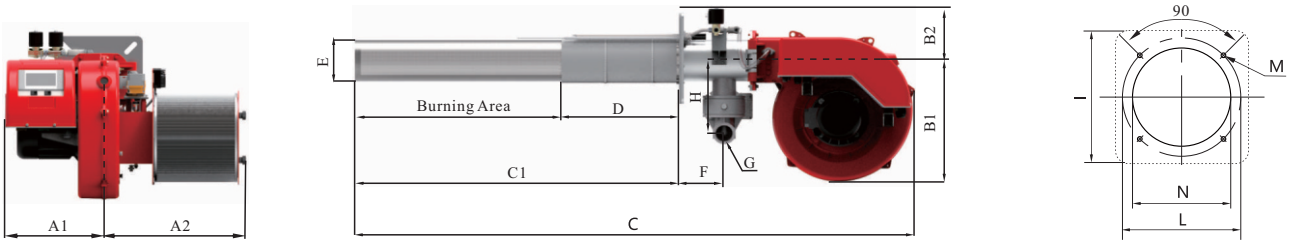

Model	A1	A2	B1	B2	C	C1	D	E	F	G	H	I	L	M	N
	mm	mm	mm	mm	mm	mm	mm	Φmm	mm	mm	mm	mm	Φmm	M	Φmm
WX85GE	355	540	428	190	2900	1100	400	145	153	G2"	256.5	321	290-370	4*M16	200
WX120GE	355	540	428	190	2200	1400	400	145	153	G2"	256.5	321	290-370	4*M16	200

Firing Rates

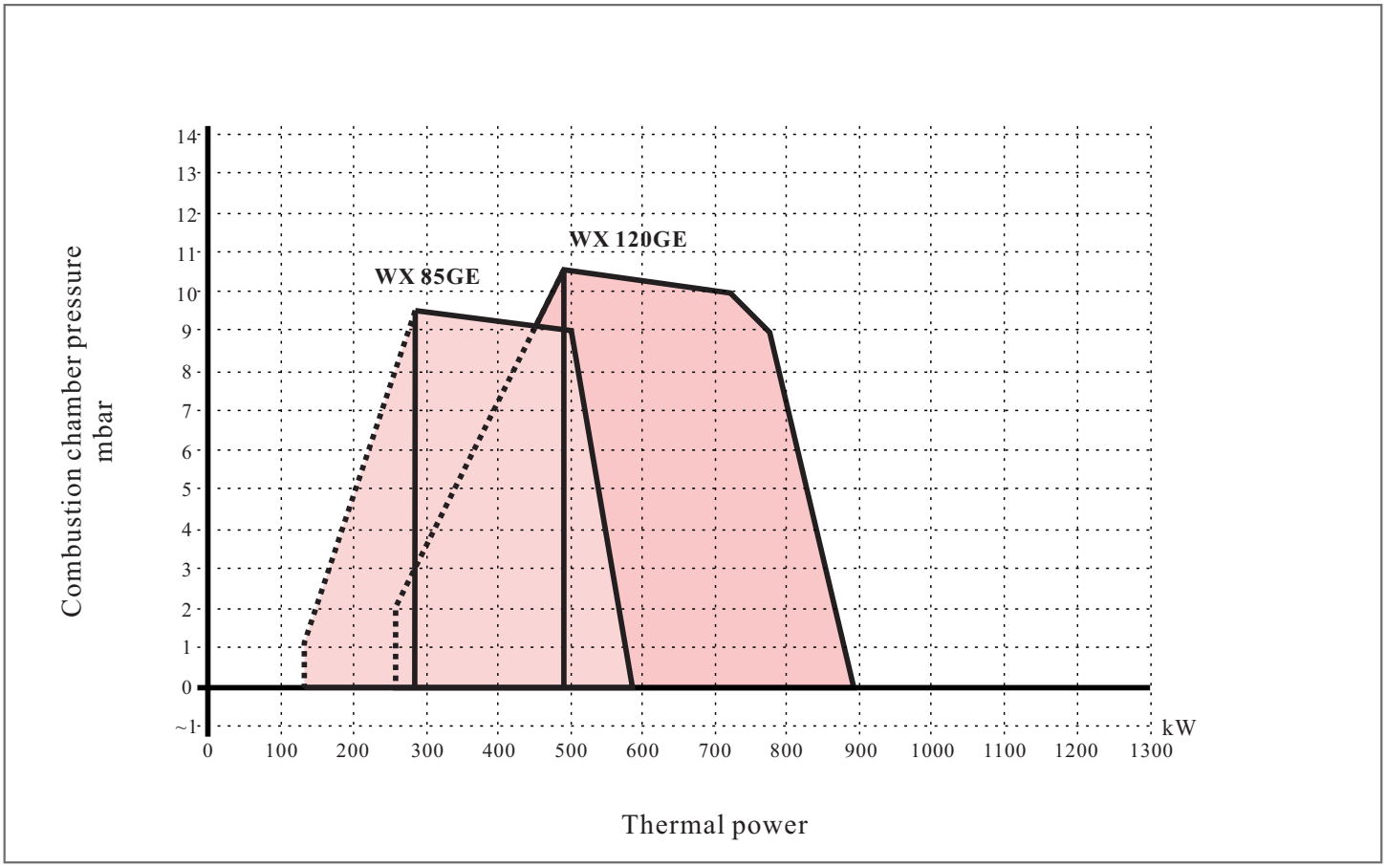

Useful firing rates for choosing the burner

Modulation range

Test condition conforming to en676
Temperature:20℃
Pressure:1013.5
Mbar altitude:0 m a.s.l

WX210-250GE

Characteristics

- Single stage operation/electronic proportional adjustment operation.
- Metal fiber surface burning, burning evenly.
- Pre-mix gas and air.
- Full premixed combustion, fast combustion speed, short flame, inhibit Ngeneration.
- The minimum NOx emission can reach 18mg/m3.

Power kW	Model	Article No.	Powe supply	Motor power kW	Package size LxPxH(mm)	Weight kg
350~1410	WX210GE	202 22 114	380V 50Hz	4.5	1030x640x735 1590x560x605	142.5
370~1750	WX250GE	202 22 116	380V 50Hz	5.5	1030x640x735 1590x560x605	157.5

*60 Hz can be cuscomized

Size

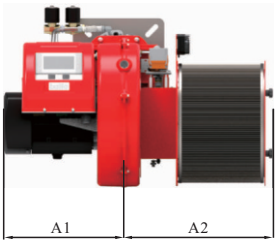

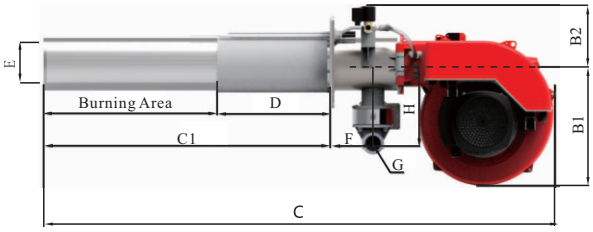

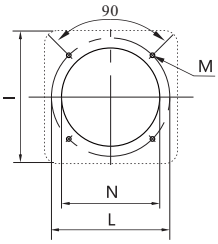

Model	A1	A2	B1	B2	C	C1	D	E	F	G	H	I	L	M	N
	mm	mm	mm	mm	mm	mm	mm	Φmm	mm	mm	mm	mm	Φmm	M	Φmm
WX210GE	405	545	428	213	2050	1250	400	185	153	G2"	279	321	290~370	4*M16	225
WX250GE	405	545	428	213	2300	1500	400	185	153	G2"	279	321	290~370	4*M16	225

Firing Rates

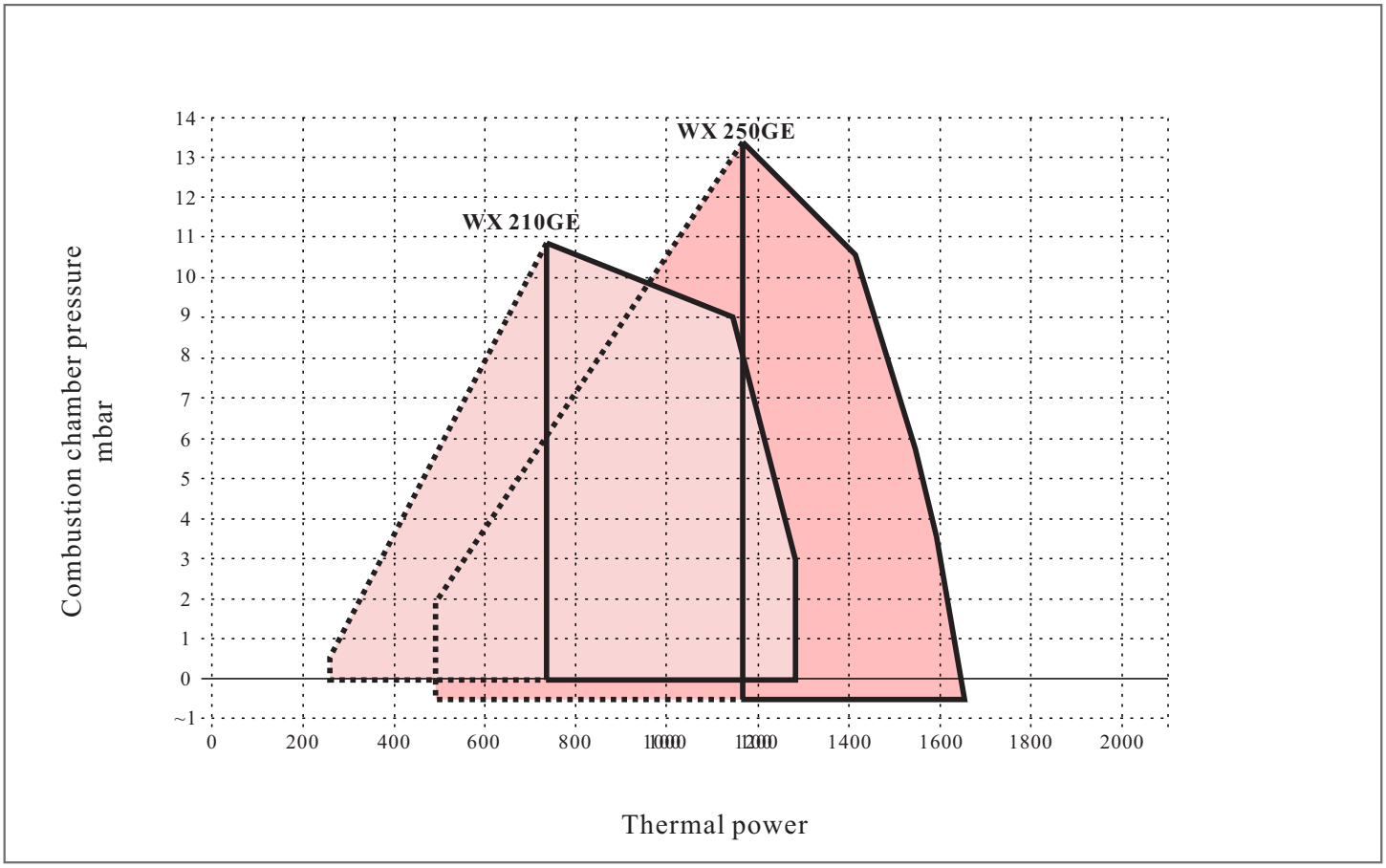

Useful firing rates for choosing the burner

Modulation range

Test condition conforming to en676
Temperature:20℃
Pressure:1013.5
Mbar altitude:0 m a.s.l

WX350-450GE

Characteristics

- Single stage operation/electronic proportional adjustment operation.
- Metal fiber surface burning, burning evenly.
- Pre-mix gas and air.
- Full premixed combustion, fast combustion speed, short flame, inhibit Ngeneration.
- The minimum NOx emission can reach 18mg/m3.

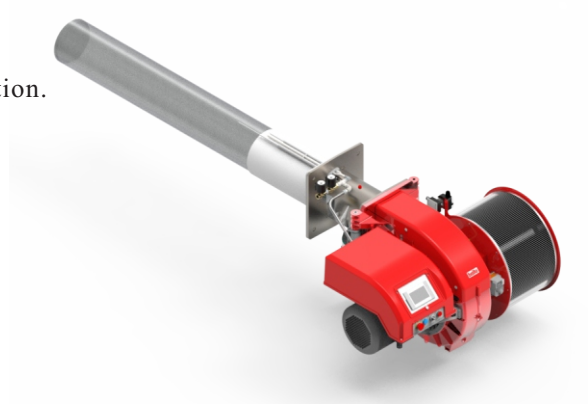

Power kW	Model	Article No.	Powe supply	Motor power kW	Package size LxPxH(mm)	Weight kg
900~2550	WX350GE	202 22 124	230V 50Hz	9.2	1340x840x950 2430x630x800	312
1100~3020	WX450GE	202 22 190	230V 50Hz	12	1340x840x950 2430x630x800	316

*60 Hz can be cuscomized

Size

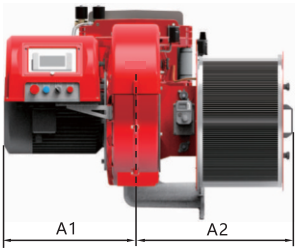

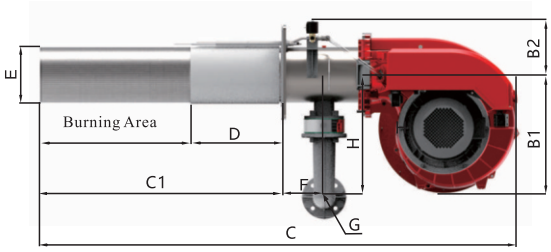

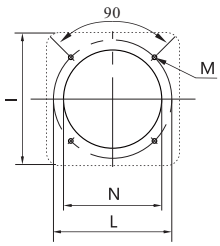

Model	A1	A2	B1	B2	C	C1	D	E	F	G	H	I	L	M	N
	mm	mm	mm	mm	mm	mm	mm	Φmm	mm	mm	mm	mm	Φmm	M	Φmm
WX350GE	557	665	537	248	2990	1910	500	251	193	DN65	555	400	452	4*M16	320
WX450GE	557	665	537	248	2990	1910	500	251	193	DN65	555	400	452	4*M16	320

Firing Rates

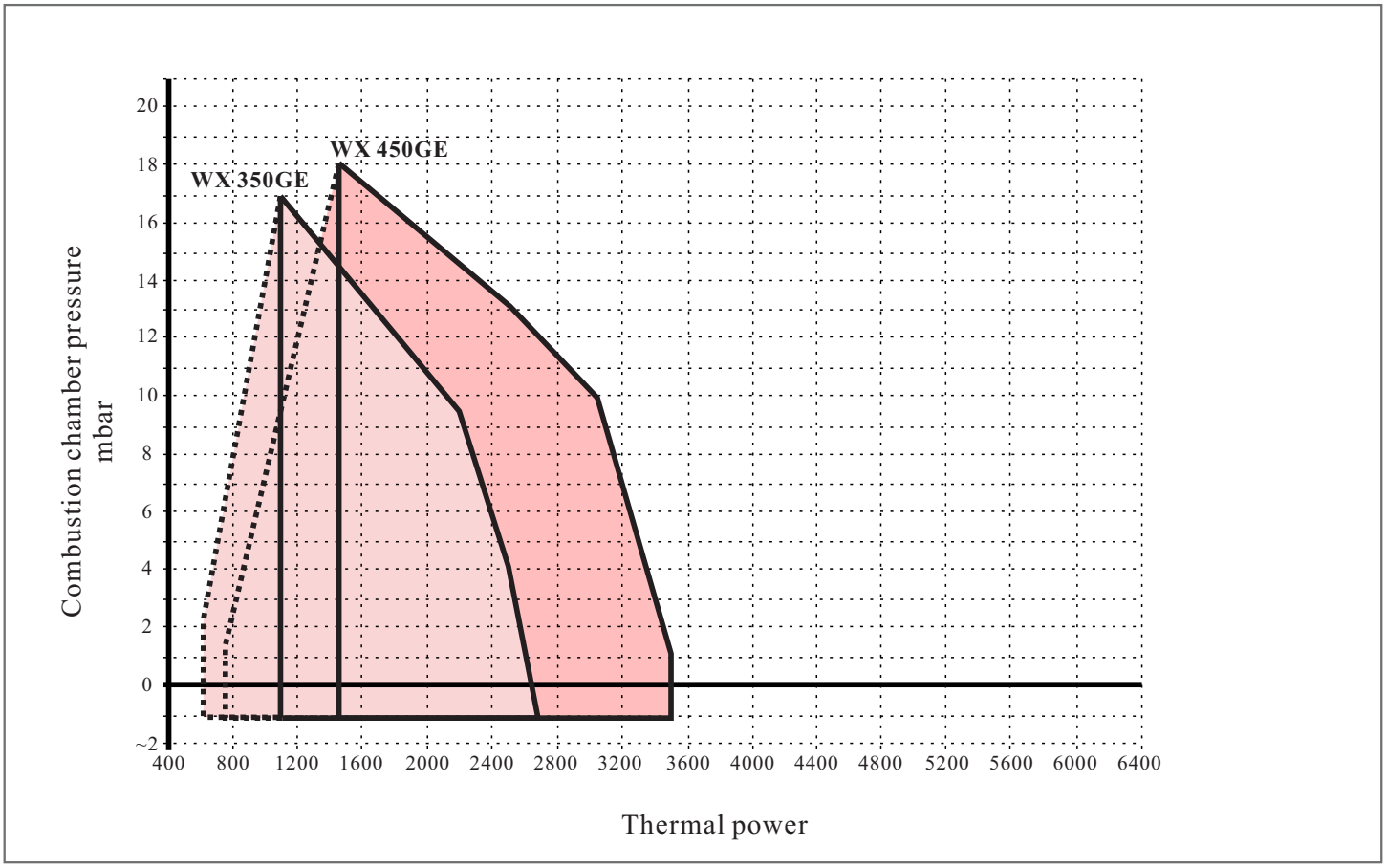

Useful firing rates for choosing the burner

Modulation range

Test condition conforming to en676
Temperature:20℃
Pressure:1013.5
Mbar altitude:0 m a.s.l

DB 1-30SE FGR

Characteristics

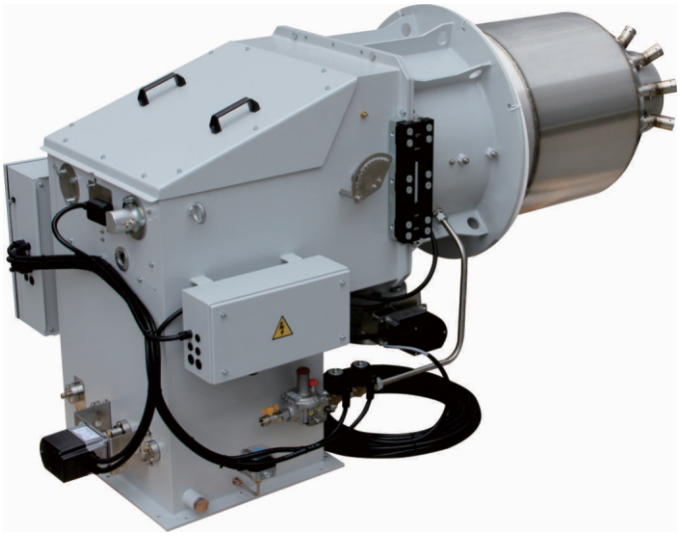

DB 1~30SE FGR burner series covers a firing range from 30 to 3000 kW, and it hasbeen designed for use in low or medium temperature hot water boilers, hot air orsteam boilers, diathermic oil boilers.

Power kW	Model	Article No.	Powe supply	Motor power kW	Package size LxPxH(mm)	Weight kg
300~1040	DB 1 SE FGR	101 010 010	380V 50Hz	30~104	1540x880x870	/
600~2400	DB 2 SE FGR	101 010 001	380V 50Hz	60~240	1540x880x870	/
500/2000~3830	DB 3 SE FGR	101 010 009	380V 50Hz	50/200~383	1840x1160x1020	/
1000~5000	DB 4 SE FGR	101 010 002	380V 50Hz	100~500	1840x1160x1020	/
1400~7800	DB 6 SE FGR	101 010 003	380V 50Hz	140~780	1840x1160x1020	/
1500~9500	DB 9 SE FGR	101 010 004	380V 50Hz	150~950	2270x1150x1190	/
1700~12500	DB 12 SE FGR	101 010 005	380V 50Hz	170~1250	2270x1150x1190	/
3000~16000	DB 16 SE FGR	101 010 006	380V 50Hz	300~1600	2280x1145x1400	/
4000~20000	DB 20 SE FGR	101 010 007	380V 50Hz	400~2000	2280x1145x1400	/
5000~25000	DB 25 SE FGR	101 010 008	380V 50Hz	500~2500	2530x1360x1545	/
6000~30000	DB 30 SE FGR	101 010 009	380V 50Hz	600~3000	2680x1360x1575	/

DB 1-30SE FGR

GAS SPPLY SYSTEM

The DB series burners are equinped with butterfly valves to control the gas volume. These butterlly valves arecontrolled by a variable profle driven by a servo motor, which adjusts the gas-to-air ratio to ensure eficientcombustion ofthe burner throughout the entire load range.

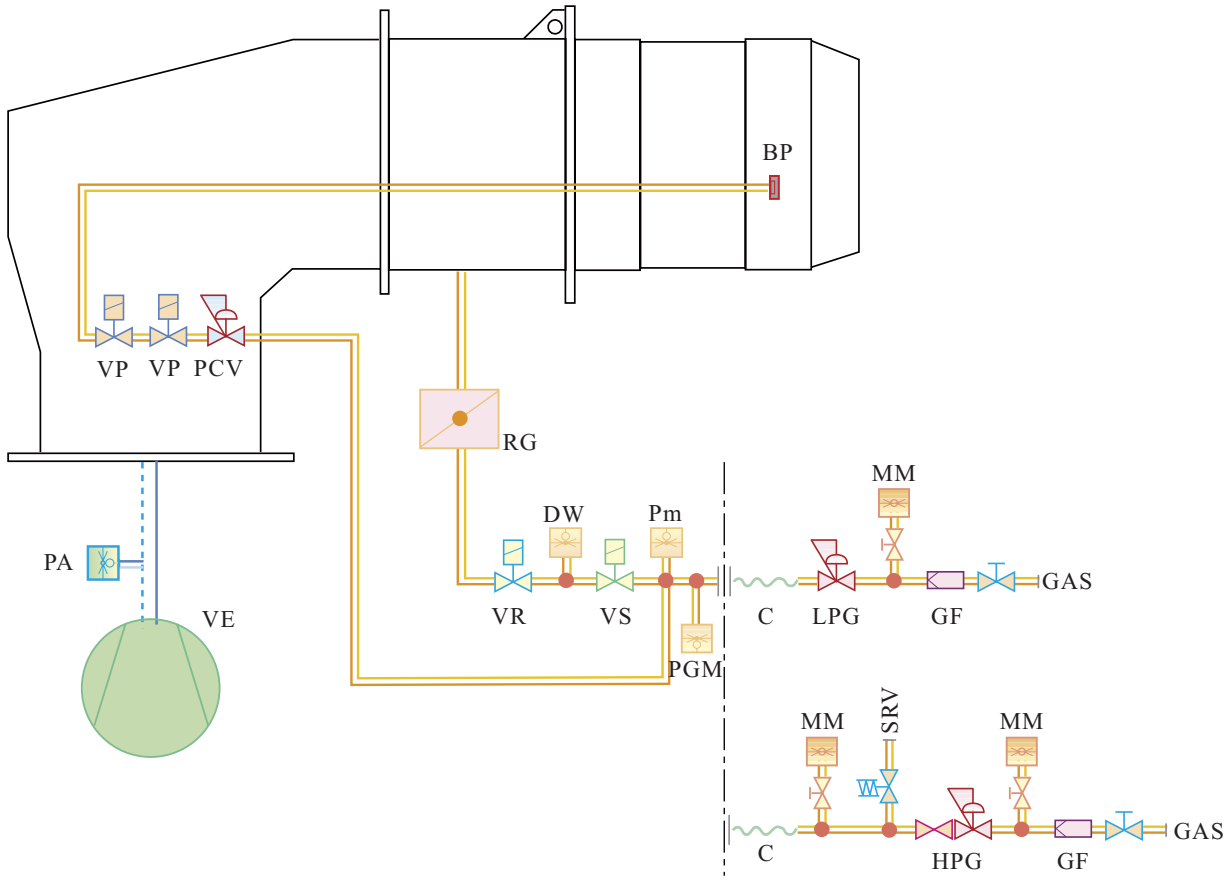

BP	Ignition Gun (DB9-12-16-20)	DW	Leakage Detection
GAS	Gas Supply Pipeline	VS	Gas Valve Group Safety Valve
VE	Fan	Pm	Minimum Gas Pressure Switch
PA	Minimum Air Pressure Switch	C	Damper
PGM	Maximum Gas Pressure Switch	LPG	Low Pressure Regulator
RG	Butterfly Valve	MM	Manometer
VP	Test Gas Valve Group Valve	GF	Filter
PCV	Test Gas Valve Group Regulator	SRV	Air Vent Safety Valve
VR	Gas Valve Group AdjusterH	HPG	High Pressure Regulator

DB 1-30SE FGR

GAS SPPLY SYSTEM

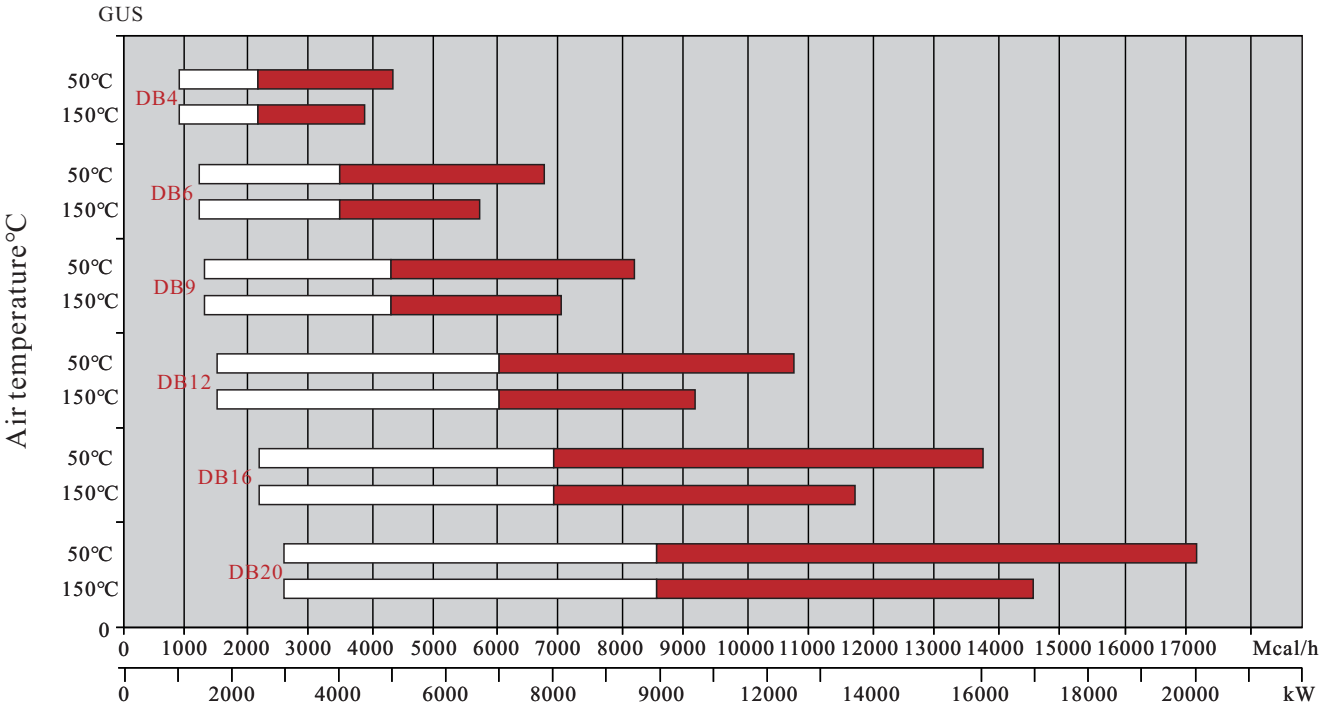

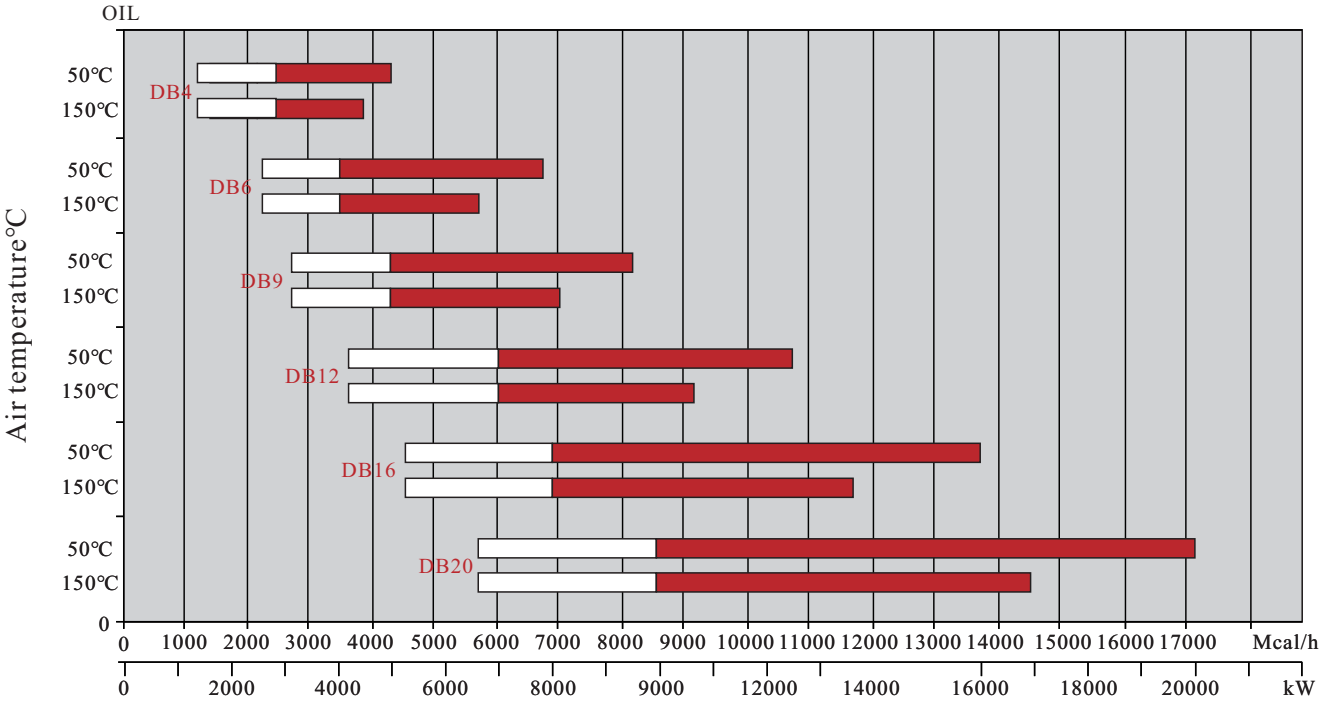

Ratio Range

Effective Output Range ofVarious Burner Models

Test condition conforming to en676
Temperature:20℃
Pressure:1013.5
Mbar altitude:0 m a.s.l

DB 1-30SE FGR

Size

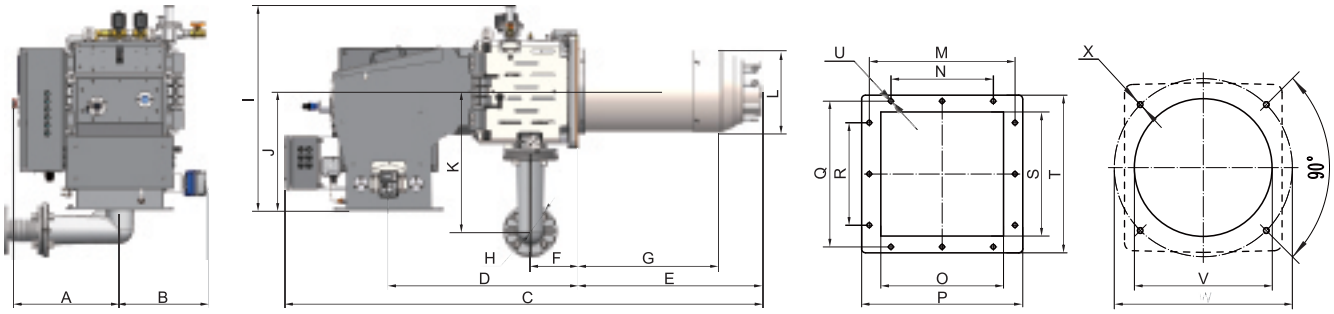

Model	A	B	C	D	E	F	G	H	I	J	K	L	M	N	O	P	Q	R	S	T	U	V	W	X
	mm	mm	mm	mm	mm	mm	mm	mm	mm	mm	mm	Φmm	mm	mm	mm	mm	mm	mm	mm	mm	Φmm	Φmm	Φmm	mm
DB1SE FGR	360	225	1350	606	498	151	400	Rp2"	570	340	231	190	290	200	220	320	230	150	160	260	12-Φ9	233	290~370	4*M16
DB2SE FGR	360	225	1350	606	498	151	400	Rp2"	570	340	231	222	290	200	220	320	230	150	160	260	12-Φ9	233	290~370	4*M16
DB3SE FGR	434	335	1800	710	700	178	540	DN65	777	450	525	313	370	260	312	409	370	260	315	400	12-Φ12	350	452	4*M16
DB4SE FGR	434	335	1800	710	700	178	540	DN65	777	450	525	313	370	260	312	409	370	260	315	400	12-Φ12	350	452	4*M16
DB6SE FGR	434	335	1800	710	700	178	540	DN65	777	450	525	313	370	260	312	409	370	260	315	400	12-Φ12	350	452	4*M16
DB9SE FGR	520	447	2120	841	807	216	635	DN80	935	550	/	413	470	400	360	440	506	436	400	476	12-Φ11	420	608	4*M20
DB12SE FGR	520	447	2120	841	807	216	635	DN80	935	550	/	456	470	400	360	440	506	436	400	476	12-Φ11	470	608	4*M20
DB16SE FGR	555	513	2154	852	852	250	542	DN100	1136	761	/	544	510	410	542	452	619	520	562	651	12-Φ11	560	608	8-M16
DB20SE FGR	555	513	2154	852	852	250	542	DN100	1136	761	/	600	510	410	542	452	619	520	562	651	12-Φ11	600	700	8-M16

Size

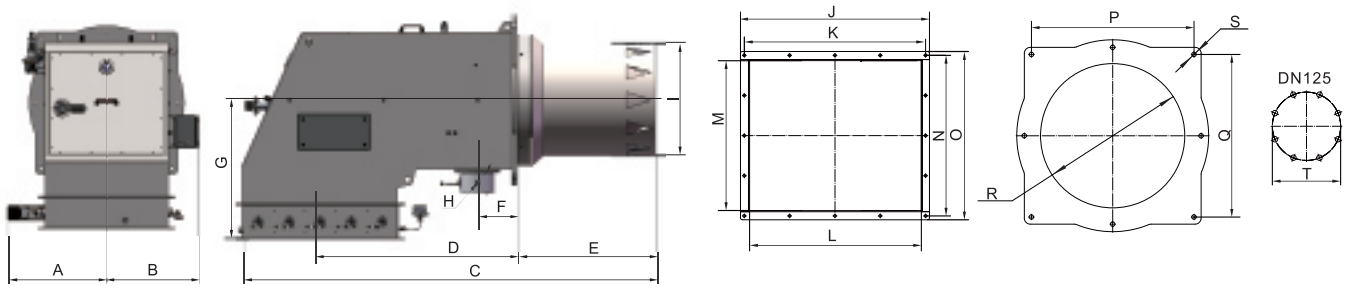

Model	A	B	C	D	E	F	G	H	I	J	K	L	M	N	O	P	Q	R	S	T
	mm	mm	mm	mm	mm	mm	mm	mm	mm	mm	mm	Φmm	mm	mm	mm	mm	mm	mm	mm	mm
DB25E FGR	600	563	1312	1087	760	220	769	DN125	720	930	892	845	737	790	828	800	800	750	8-M20	210
DB30SE FGR	604	574	2395	1087	850	220	769	DN125	720	930	892	845	737	790	828	800	800	750	8-M20	210

TEST CERTIFICATE

燃油（气）燃烧器型式试验证书
Type Testing Certificate for Oil/Gas Burner

证书编号/Certificate No.: TSX B1000120200355

制造单位 Manufacturer: 温州万易热能科技有限公司
单位地址 Manufacturer Address: 浙江省乐清市乐清经济开发区纬十二路 205-27
燃烧器名称 Name of Burner: 超低氮燃气燃烧器
燃烧器型号 Model of Burner: DB-QEF-2.8-FGR(DB4)
燃烧器类别 Classification of Burner: 燃气燃烧器
试验报告书编号 Type Testing Report No.: 20X0191-XR01

经试验，确认符合《燃油（气）燃烧器安全技术规则》的规定，主要配件及可覆盖型号见附件。/ Has been examined to be in accordance with the *Safety Technical Regulation for Oil and Gas Burners*. The list of main accessories and the exempt models are attached overleaf.

中国特种设备检测研究院
China Special Equipment Inspection and Research Institute
发证日期 / Issue Date: 2020 年 08 月 10 日

燃油（气）燃烧器型式试验证书
Type Testing Certificate for Oil/Gas Burner

证书编号/Certificate No.: TSX B1000120210270

制造单位 Manufacturer: 浙江万易热能设备有限公司
单位地址 Manufacturer Address: 浙江省乐清市乐清经济开发区纬十二路 205-27
燃烧器名称 Name of Burner: 超低氮燃气燃烧器
燃烧器型号 Model of Burner: WS-QDF-1.2
燃烧器类别 Classification of Burner: 燃气燃烧器
试验报告书编号 Type Testing Report No.: 21X0122-XR06

经试验，确认符合《燃油（气）燃烧器安全技术规则》的规定，主要配件及可覆盖型号见附件。/ Has been examined to be in accordance with the *Safety Technical Regulation for Oil and Gas Burners*. The list of main accessories and the exempt models are attached overleaf.

中国特种设备检测研究院
China Special Equipment Inspection and Research Institute
发证日期 / Issue Date: 2021 年 06 月 06 日

燃油（气）燃烧器型式试验证书
Type Testing Certificate for Oil/Gas Burner

证书编号/Certificate No.: TSX B1000120210269

制造单位 Manufacturer: 浙江万易热能设备有限公司
单位地址 Manufacturer Address: 浙江省乐清市乐清经济开发区纬十二路 205-27
燃烧器名称 Name of Burner: 超低氮燃气燃烧器
燃烧器型号 Model of Burner: WS-QMF-4.2
燃烧器类别 Classification of Burner: 燃气燃烧器
试验报告书编号 Type Testing Report No.: 21X0122-XR05

经试验，确认符合《燃油（气）燃烧器安全技术规则》的规定，主要配件及可覆盖型号见附件。/ Has been examined to be in accordance with the *Safety Technical Regulation for Oil and Gas Burners*. The list of main accessories and the exempt models are attached overleaf.

中国特种设备检测研究院
China Special Equipment Inspection and Research Institute
发证日期 / Issue Date: 2021 年 06 月 06 日

燃油（气）燃烧器型式试验证书
Type Testing Certificate for Oil/Gas Burner

证书编号/Certificate No.: TSX B1000120210265

制造单位 Manufacturer: 浙江万易热能设备有限公司
单位地址 Manufacturer Address: 浙江省乐清市乐清经济开发区纬十二路 205-27
燃烧器名称 Name of Burner: 超低氮燃气燃烧器
燃烧器型号 Model of Burner: WS-QDF-0.4
燃烧器类别 Classification of Burner: 燃气燃烧器
试验报告书编号 Type Testing Report No.: 21X0122-XR01

经试验，确认符合《燃油（气）燃烧器安全技术规则》的规定，主要配件及可覆盖型号见附件。/ Has been examined to be in accordance with the *Safety Technical Regulation for Oil and Gas Burners*. The list of main accessories and the exempt models are attached overleaf.

中国特种设备检测研究院
China Special Equipment Inspection and Research Institute
发证日期 / Issue Date: 2021 年 06 月 06 日

液（气）体燃料燃烧器型式试验证书
Type Testing Certificate for Liquid/Gas Fuel Burner

证书编号/Certificate No.: TSX B1000120220053

制造单位 Manufacturer: 浙江万易热能设备有限公司
单位地址 Manufacturer Address: 浙江省乐清市乐清经济开发区纬十二路 205-27
燃烧器名称 Name of Burner: 超低氮燃气燃烧器
燃烧器型号 Model of Burner: WS-QEF-7.0-FGR
燃烧器类别 Classification of Burner: 气体燃料燃烧器
试验报告书编号 Type Testing Report No.: 22X0016-XR01

经试验，确认符合《锅炉安全技术规程》的规定，主要配件见附件。/ Has been examined to be in accordance with the *Regulation on Safety Technology for Boiler*. The list of main accessories and the exempt models are attached overleaf.

中国特种设备检测研究院
China Special Equipment Inspection and Research Institute
发证日期 / Issue Date: 2022 年 02 月 26 日

燃油（气）燃烧器型式试验证书
Type Testing Certificate for Oil/Gas Burner

证书编号/Certificate No.: TSX B1000120190353

制造单位 Manufacturer: 温州万易热能科技有限公司
单位地址 Manufacturer Address: 浙江省乐清市乐清经济开发区纬十二路 205-27
燃烧器名称 Name of Burner: 超低氮燃气燃烧器
燃烧器型号 Model of Burner: WS-QEF-3.9-FGR
燃烧器类别 Classification of Burner: 燃气燃烧器
试验报告书编号 Type Testing Report No.: 19X0234-XR04

经试验，确认符合《燃油（气）燃烧器安全技术规则》的规定，主要配件及可覆盖型号见附件。/ Has been examined to be in accordance with the *Safety Technical Regulation for Oil and Gas Burners*. The list of main accessories and the exempt models are attached overleaf.

中国特种设备检测研究院
China Special Equipment Inspection and Research Institute
发证日期 / Issue Date: 2019 年 07 月 09 日

ASSEMBLING PLANT

PROJECT CASE


力威锅炉


海 天


Ferroli
Ferroli

BOILER TESTING CENTRE

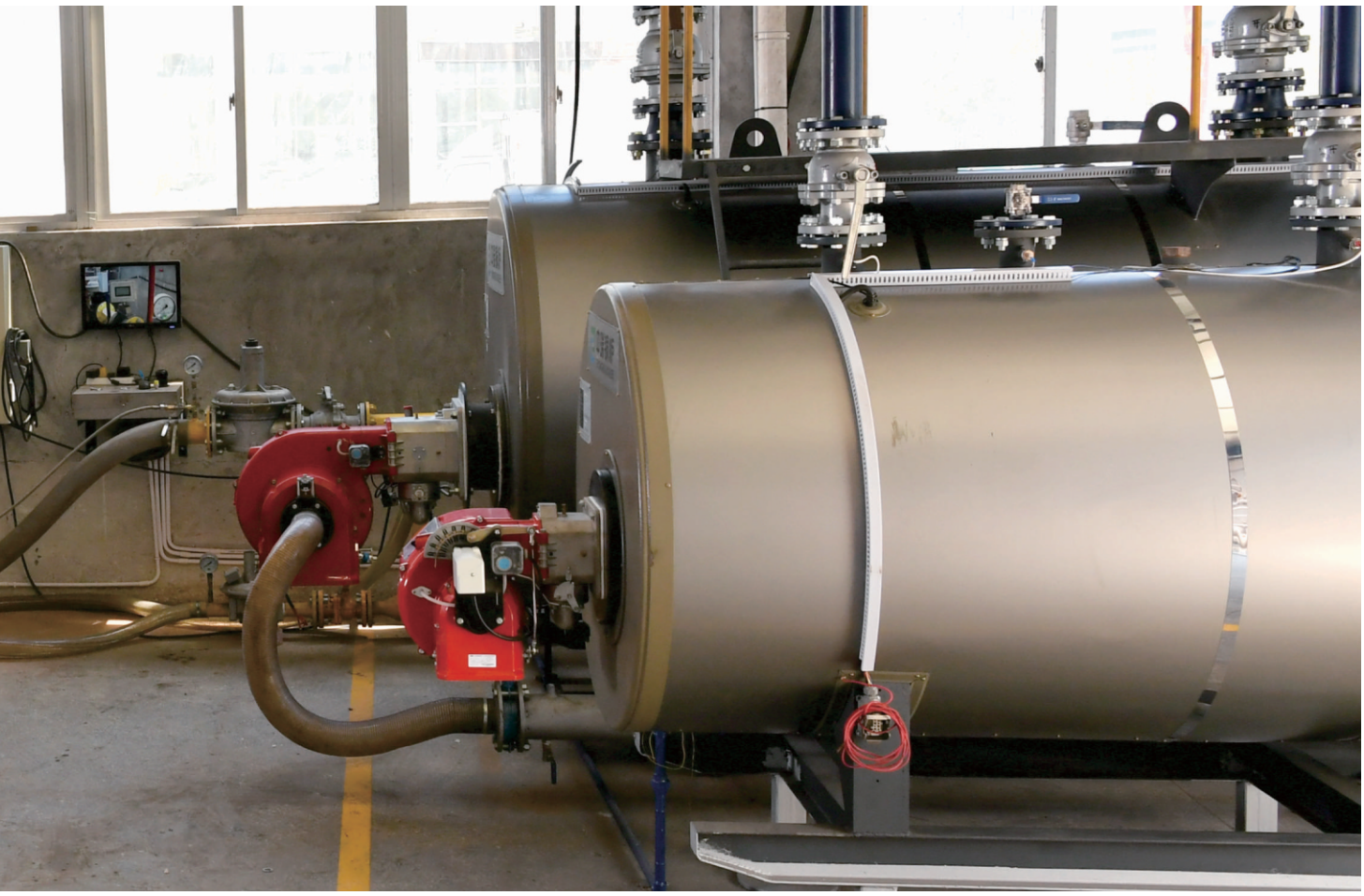


中瑞锅炉
ZHONGRUI BOILER
中瑞锅炉
ZHONGRUI BOILER

ZHEJIANG WANYI THERMAL ENERGY EQUIPMENT CO., LTD.