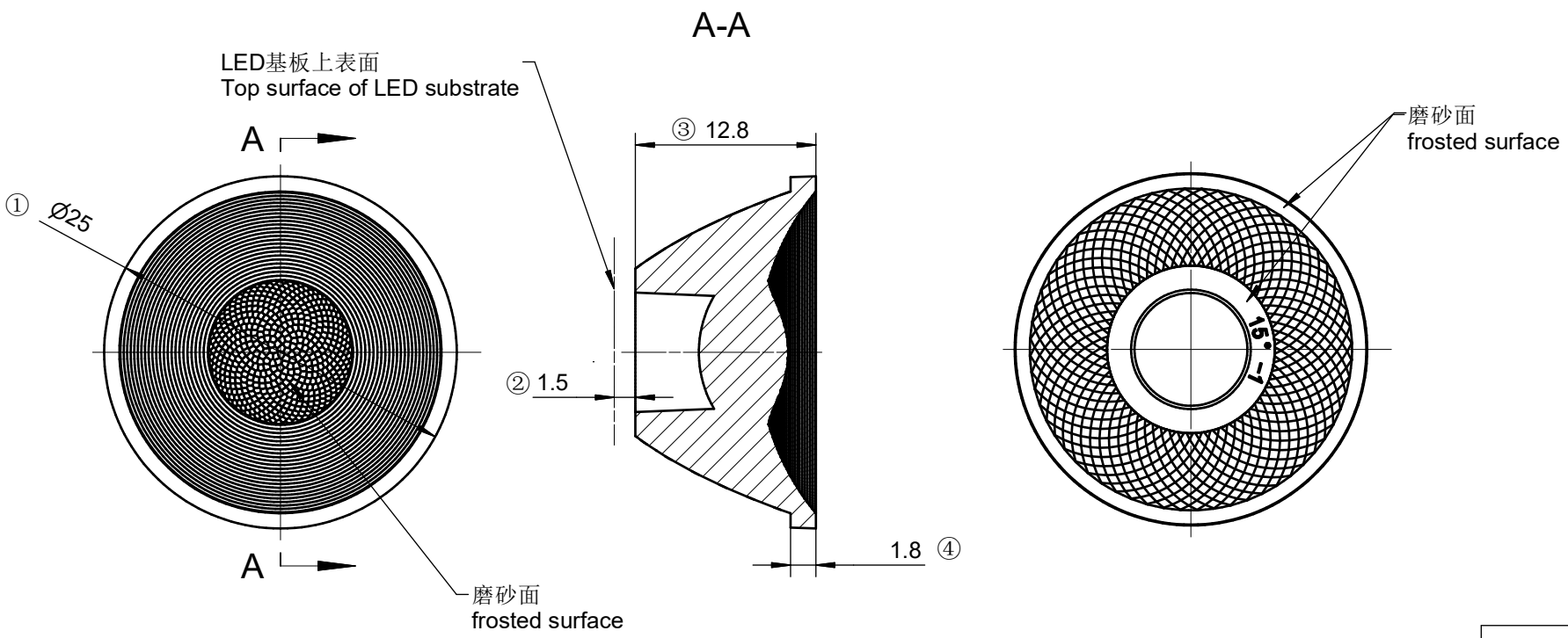


| 表 | |
|---|---|
| 基本尺寸范围 | 公差值 |
| Basic size | Tolerance value |
| ＜3 | ±0.1 |
| 3～10 | ±0.15 |
| 10～24 | ±0.20 |
| 24～65 | ±0.35 |
| 65～140 | ±0.50 |
| 140～250 | ±0.80 |
| 250～450 | ±1.2 |
| ＞450 | ±2.0 |

技术要求：
1、未注圆角及拔模斜度按3D图。
2、未注尺寸公差按右表。
3、表面无飞边，缩水，气泡等缺陷。
*4、灯具采用胶圈防水时：要求散热器与胶圈的接触面的粗糙度：Ra＜3.2μm

Technical remark:
1.Fillet and inclination not indicated according to 3D drawing.
2. Dimensional tolerances not indicated are shown in the right list.
3, The surface has no flash, shrinkage, bubbles and other defects.
*4. When the lamp adopts rubber ring for waterproofing: the roughness of the contact surface between the radiator and the rubber ring is required: Ra<3.2μm

| 序号 Item | 更改标记 Change mark | 更改内容 Change content | 更改日期 Change date | 签名 Signature | 序号 Item | 更改标记 Change mark | 更改内容 Change content | 更改日期 Change date | 签名 Signature |
|---|---|---|---|---|---|---|---|---|---|
| 2 | | | | | 4 | | | | |
| 1 | | | | | 3 | | | | |

| | | | | |
|---|---|---|---|---|
| 光学设计 Optical design | | | Title: HK 黑光25@13-15度透镜 HK Dark 25@13-15°lens | Drawing No. HK-HG-25@13-15-D4-21-1g-1 |
| 结构设计 Structural design | | | | Part No. 1.01.92131 |
| 审核 Verify | | | | |
| 审定 Approval | | | 材料 Material: PMMA | CDHK |