Model Name: T320XVN02.H

Issue Date : 2022/2/14

( )Preliminary Specifications
(＊)Final Specifications

AUO Final Spec for Qiangfeng

Customer Signature	Date	AUO	Date
Approved By		Approval By PM Director	
Note		Reviewed By RD Director	
		Reviewed By Project Leader	
		Prepared By PM	

© Copyright AU Optronics Corp. 2022 All Rights Reserved.

CONTENTS

1 GENERAL DESCRIPTION 4
2 ABSOLUTE MAXIMUM RATINGS 5
3 OPTICAL SPECIFICATION 6
4 INTERFACE SPECIFICATION 9
4.1 INPUT POWER 9
4.2 INPUT CONNECTION 10
4.3 INPUT DATA FORMAT 11
4.3.1 Data mapping 11
4.3.2 Color Input Data Reference 12
5 SIGNAL TIMING SPECIFICATION 13
5.1 INPUT TIMING 13
5.1.1 TIMING TABLE (DE ONLY MODE) 13
5.1.2 TIMING WAVEFORM 14
5.2 INPUT INTERFACE CHARACTERISTICS 15
5.3 POWER SEQUENCE FOR LCD 18
6 MECHANICAL CHARACTERISTICS 19
6.1 OPEN CELL AND T-CON MECHANICAL DRAWING 19
6.2 FFC SHAPE AND DIMENSION RECOMMENDATION 22
6.2.1 Connector Type 22
6.2.2 FFC Drawing 22
7. PACKING 23
8. PRECAUTIONS 26
8.1 STORAGE 26
8.2 MODULE ASSEMBLY 26
8.2.1 Protection film peeling 26
8.2.2 Assembly Precautions 27
8.2.3 FFC & PCB Precautions 27
8.2.4 Flicker adjust 27
8.3 AGING 28
8.4 OPERATING PRECAUTIONS 28
8.5 OTHERS 28
APPENDIX I – VCOM ADJUSTMENT 29

AUO Final Spec for Qiangfeng

© Copyright AU Optronics Corp. 2022 All Rights Reserved.

RECORD OF REVISION

Version	Date	Page	Description
1.0	2022/2/14	All	First release

AUO Final Spec for Qiangfeng

© Copyright AU Optronics Corp. 2022 All Rights Reserved.

1 General Description

This specification applies to the 32 inch Color TFT-LCD SKD model T320XVN02.H. This Open Cell Unit has a TFT active matrix type liquid crystal panel with 1366 x 768 pixels and LVDS interface; which can display up to 16.7 million colors.

*** General Information**

Items	Specification	Unit	Note
Active Screen Size	32	inch	
Display Area	697.685(H) x 392.256(V)	mm	
Outline Dimension	713.68(H) x 447.41 (V)	mm	
Cell Dimension	713.68(H) x 408.72 (V) x 1.4(D)	mm	D: cell thickness
Driver Element	a-Si TFT active matrix		
Display Colors	8 bit (16.7 million)	Colors	
Number of Pixels	1,366 x 768	Pixel	
Pixel Pitch	0.51075 (H) x 0.51075(W)	mm	
Pixel Arrangement	RGB horizontal stripe		
Display Operation Mode	Normally Black		
Surface Treatment	Anti-Glare, 3H		Haze=2%
Transmittance (with Polarizer)	6.8 %		Typical value
Weight	880	g	Typical value
Display Orientation	Signal input with “ABC”		Note 1

Note 1: LCD display as below illustrated when signal input with “ABC”.

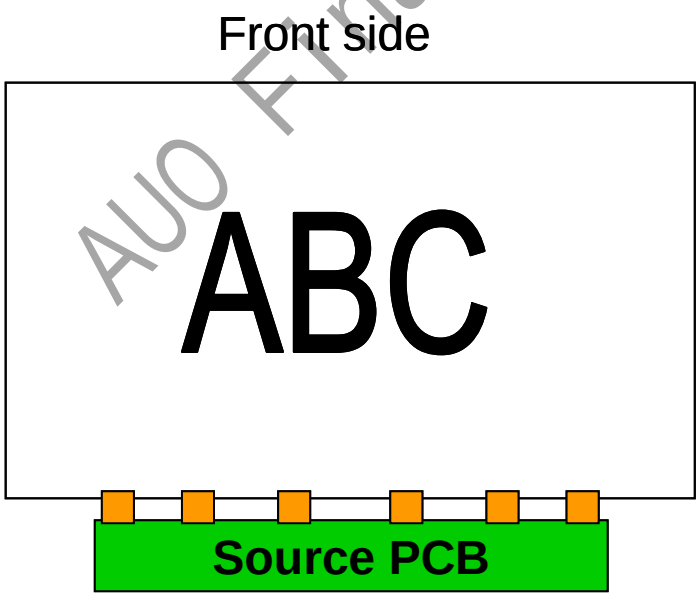

AUO Final Spec for Qiangfeng

© Copyright AU Optronics Corp. 2022 All Rights Reserved.

2 Absolute Maximum Ratings

The followings are maximum values which, if exceeded, may cause faulty operation or damage to the unit or the unrecoverable damage on the device.

Item	Symbol	Min	Max	Unit	Conditions
Logic/LCD Drive Voltage	V_{DD}	-0.3	14	[Volt] DC	Note 1
Input Voltage of Signal	Vin	-0.3	4	[Volt]DC	Note 1
Operating Temperature	TOP	0	+50	[°C]	Note 2
Operating Humidity	HOP	10	90	[%RH]	Note 2
Storage Temperature	TST	-20	+60	[°C]	Note 2
Storage Humidity	HST	10	90	[%RH]	Note 2
Panel Surface Temperature	PST		65	[°C]	Note 3

Note 1: Duration:50 msec.

Note 2 : Maximum Wet-Bulb should be 39℃ and No condensation.

The relative humidity must not exceed 90% non-condensing at temperatures of 40℃ or less. At temperatures greater than 40℃, the wet bulb temperature must not exceed 39℃.

Note 3: Surface temperature is measured at 50℃ Dry condition

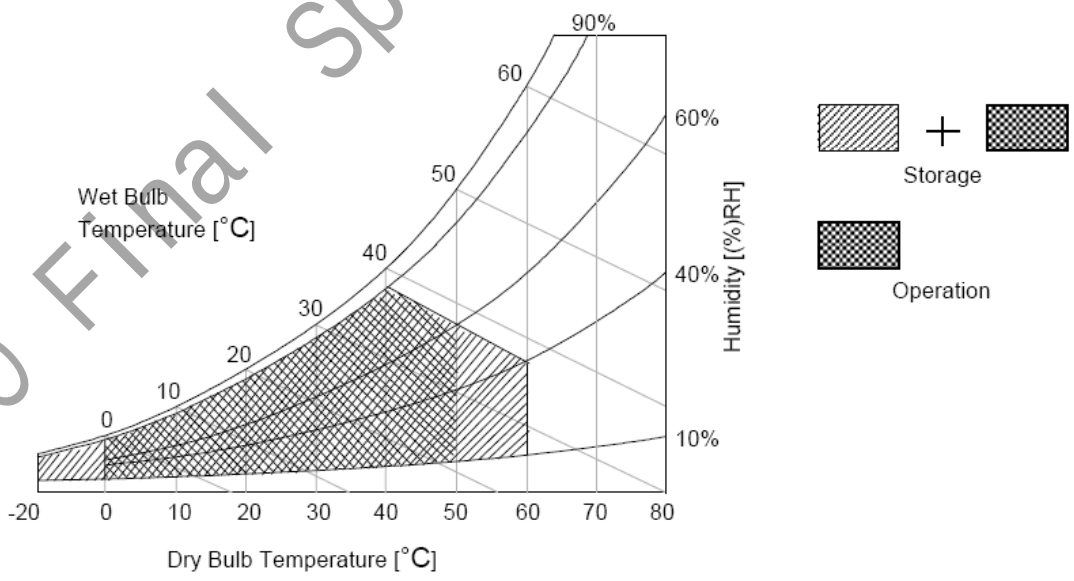

AUO Final Spec for Qiangfeng

© Copyright AU Optronics Corp. 2022 All Rights Reserved.

3 Optical Specification

Optical characteristics are determined after the unit has been 'ON' and stable for approximately 45 minutes in a dark environment at 25°C. The values specified are measured on the center of active area and at an approximate distance 500 mm from the LCD surface at a viewing angle of φ and θ equal to 0°.

Fig.1 presents additional information concerning the measurement equipment and method.

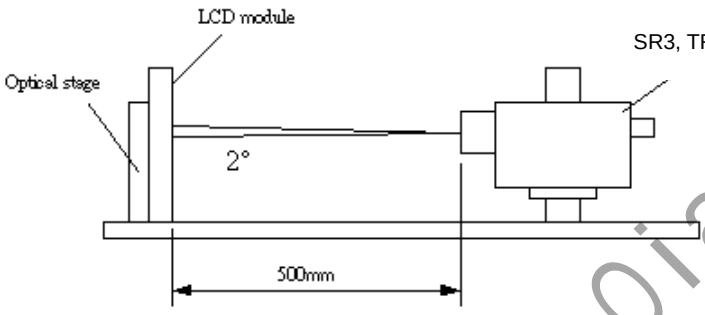

Parameter		Symbol	Condition	Values			Unit	Notes
				Min.	Typ.	Max		
Contrast Ratio		CR	SR3, TRD-100	2400	3000	--		1, 2
Response Time (G to G)		T_{γ}		--	8	16	ms	3
Color Chromaticity			With SR3 Standard light source "C"					4
	Red	R_X		Typ.-0.03	0.664	Typ.+0.03		
		R_Y			0.325			
	Green	G_X			0.279			
		G_Y			0.589			
	Blue	B_X			0.138			
		B_Y			0.110			
	White	W_X			0.295			
		W_Y			0.341			
Viewing Angle			SR3					1, 5
	x axis, right(φ=0°)	θ_r		85	89	--	degree	
	x axis, left(φ=180°)	θ_l		85	89	--	degree	
	y axis, up(φ=90°)	θ_u		85	89	--	degree	
	y axis, down (φ=270°)	θ_d		85	89	--	degree	

1. Light source here is the BLU of AUO module (film structure: two diffuser sheets).
2. Contrast Ratio (CR) is defined mathematically as:

$$\textbf{Contrast Ratio} = \frac{\textbf{Surface Luminance at center location of all white pixels}}{\textbf{Surface Luminance at center location of all black pixels}}$$

AUO Final Spec for Qiangfeng

© Copyright AU Optronics Corp. 2022 All Rights Reserved.

3. Response time T_γ is the average time required for display transition by switching the input signal for five luminance ratio (0%,25%,50%,75%,100% brightness matrix) and is based on Frame rate = 60Hz to optimize.

Measured Response Time		Target				
		0%	25%	50%	75%	100%
Start	0%		0% to 25%	0% to 50%	0% to 75%	0% to 100%
	25%	25% to 0%		25% to 50%	25% to 75%	25% to 100%
	50%	50% to 0%	50% to 25%		50% to 75%	50% to 100%
	75%	75% to 0%	75% to 25%	75% to 50%		75% to 100%
	100%	100% to 0%	100% to 25%	100% to 50%	100% to 75%	

T_γ is determined by 10% to 90% brightness difference of rising or falling period. (As illustrated)

The response time is defined as the following figure and shall be measured by switching the input signal for "any level of gray(bright) " and "any level of gray(dark)".

FIG.3 Response Time

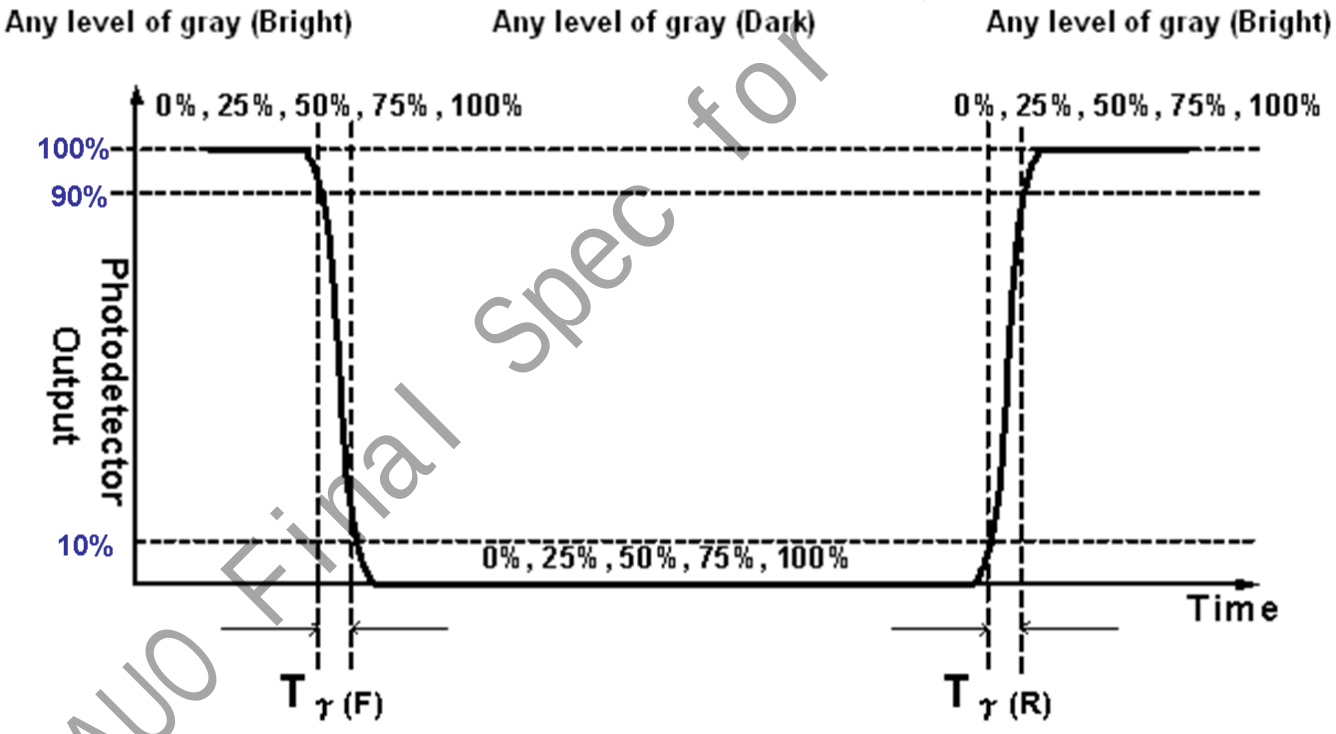

4. Light source here is the standard light source "C" which is defined by CIE and driving voltages are based on suitable gamma voltages. The calculating method is as following：
   A. Measure the "Module" and "BLU" optical spectrums (W, R, G, B).
   B. Calculate cell spectrum from "Module" and "BLU" spectrums.
   C. Calculate color chromaticity by using cell spectrum and the spectrum of standard light source "C".
5. Viewing angle is the angle at which the contrast ratio is greater than 10. The angles are determined for the horizontal or x axis and the vertical or y axis with respect to the z axis which is normal to the LCD surface. For more information see FIG4.

AUO Final Spec for Qiangfeng

© Copyright AU Optronics Corp. 2022 All Rights Reserved.

FIG.4 Viewing Angle

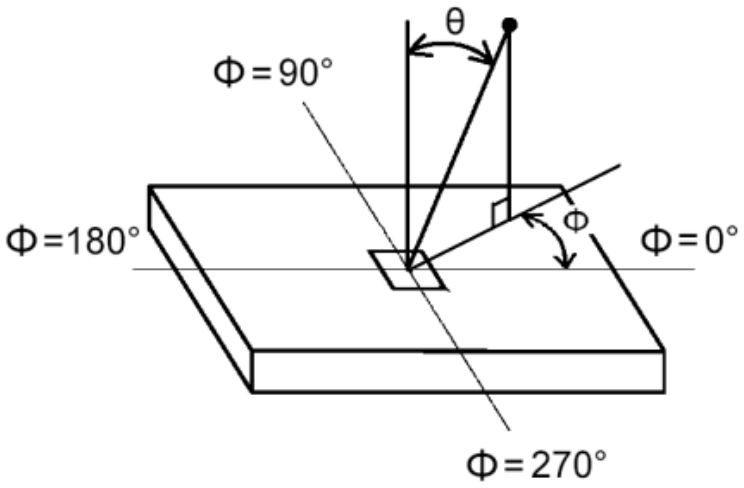

AUO Final Spec for Qiangfeng

© Copyright AU Optronics Corp. 2022 All Rights Reserved.

4 Interface Specification

4.1 Input power

The T320XVN02.H Open Cell Unit requires power input which is employed to power the LCD electronics and to drive the TFT array and liquid crystal.

Item		Symbol	Min.	Typ.	Max	Unit	Note
Power Supply Input Voltage		V_{DD}	10.8	12	13.2	V	1
Power Supply Input Current	Black pattern	I_{DD}	-	0.35	0.42	A	2
	White pattern		-	0.35	0.42	A	
	Sub H-stripe pattern		-	0.5	0.6	A	
Power Consumption	Black pattern	P_C	-	4.2	5.04	Watt	
	White pattern		-	4.2	5.04	Watt	
	Sub H-strip pattern		-	6	7.2	Watt	
Inrush Current		I_{RUSH}	--	--	4	A	3

Note1. The ripple voltage should be fewer than 5% of VDD.

Note2. Test Condition:

(1) V_{DD} = 12.0V, (2) Fv = 60Hz, (3) Fclk= 80.09MHz, (4) Temperature = 25 ℃

(5) Power dissipation check pattern. (Only for power design)

a. Black pattern



b. White pattern



c. Sub H-Strip pattern

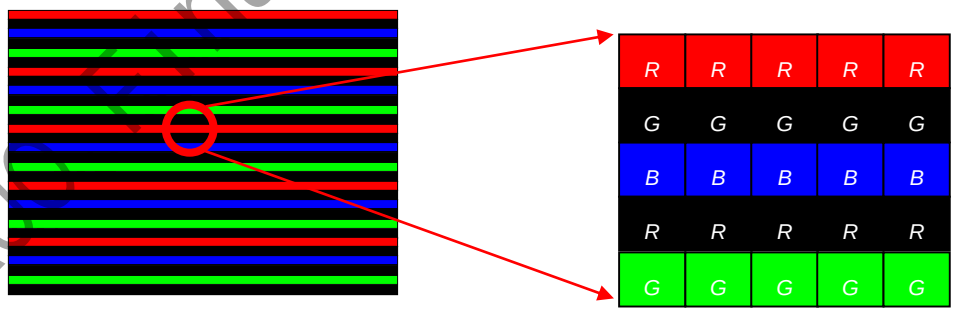

Note3. Measurement condition : Rising time = 400us

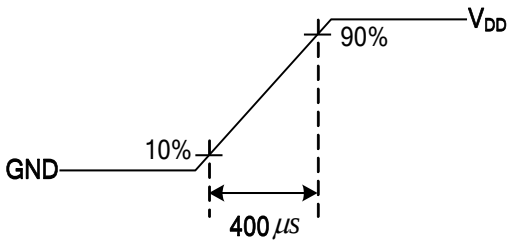

AUO Final Spec for Qiangfeng

© Copyright AU Optronics Corp. 2022 All Rights Reserved.

4.2 Input Connection

■ LCD connector: FI-X30SSLA-HF(JAE)、093G30-00001A-M4(CLE)

PIN	Symbol	Description
1	V_{DD}	Power Supply Input Voltage
2	V_{DD}	Power Supply Input Voltage
3	V_{DD}	Power Supply Input Voltage
4	V_{DD}	Power Supply Input Voltage
5	GND	Ground
6	GND	Ground
7	GND	Ground
8	GND	Ground
9	LVDS_SEL	Open/high (3.3V) for NS , Low (GND) for JEIDA
10	N.C.	No connection
11	GND	Ground
12	CH1_0-	LVDS Channel 1, Signal 0-
13	CH1_0+	LVDS Channel 1, Signal 0+
14	GND	Ground
15	CH1_1-	LVDS Channel 1, Signal 1-
16	CH1_1+	LVDS Channel 1, Signal 1+
17	GND	Ground
18	CH1_2-	LVDS Channel 1, Signal 2-
19	CH1_2+	LVDS Channel 1, Signal 2+
20	GND	Ground
21	CH1_CLK-	LVDS Channel 1, Clock -
22	CH1_CLK+	LVDS Channel 1, Clock +
23	GND	Ground
24	CH1_3-	LVDS Channel 1, Signal 3-
25	CH1_3+	LVDS Channel 1, Signal 3+
26	GND	Ground
27	SCL	I2C Clock
28	SDA	I2C Data
29	WP	Write Protection
30	GND	Ground

Note1. Pin number start from the left side as the following figure.

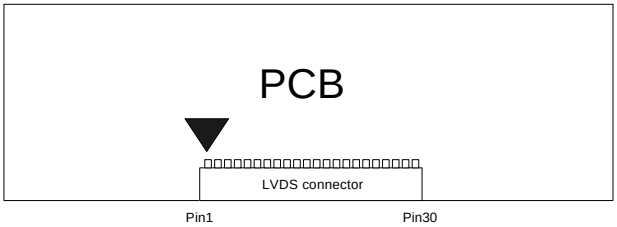

AUO Final Spec for Qiangfeng

© Copyright AU Optronics Corp. 2022 All Rights Reserved.

4.3 Input Data Format

4.3.1 Data mapping

■ **LVDS Option NS**

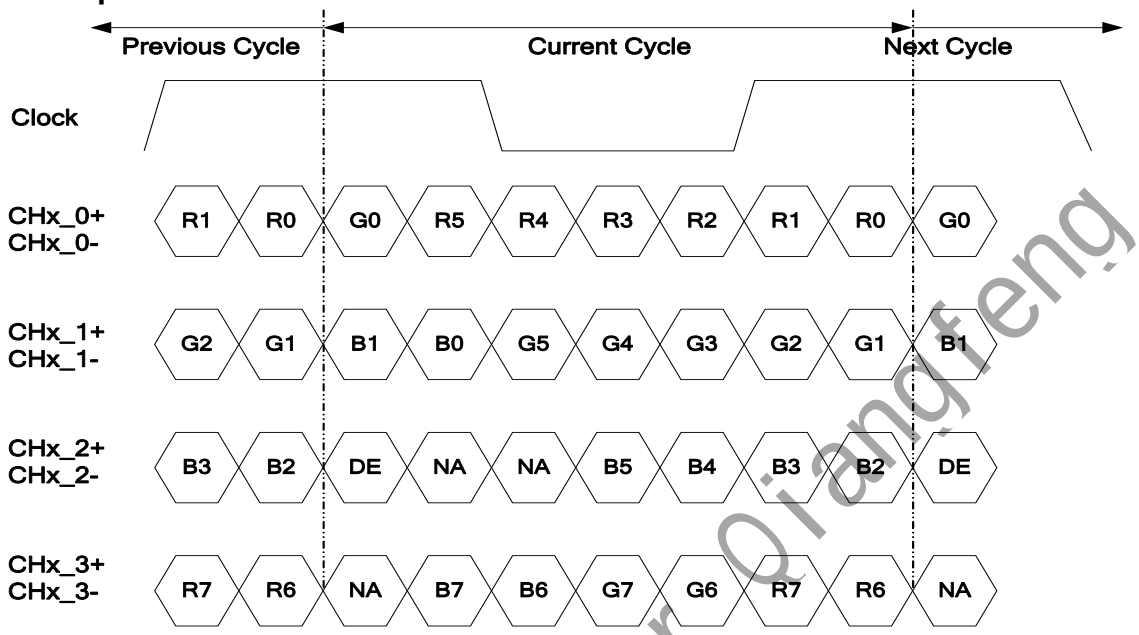

Note: x = 1, 2, 3, 4…

■ **LVDS Option JEIDA**

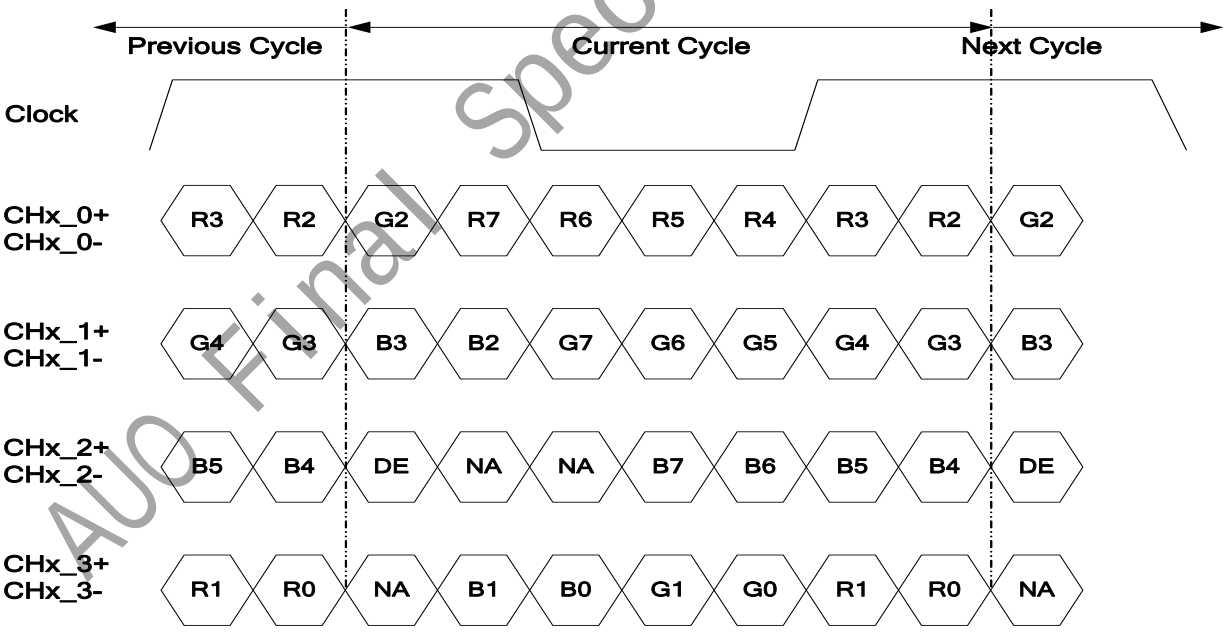

Note: x = 1, 2, 3, 4…

AUO Final Spec for Qiangfeng

© Copyright AU Optronics Corp. 2022 All Rights Reserved.

4.3.2 Color Input Data Reference

The brightness of each primary color (red, green and blue) is based on the 8 bit gray scale data input for the color; the higher the binary input, the brighter the color. The table below provides a reference for color versus data input.

COLOR DATA REFERENCE

Color		Input Color Data																							
		RED								GREEN								BLUE							
		MSB							LSB	MSB							LSB	MSB							LSB
		R7	R6	R5	R4	R3	R2	R1	R0	G7	G6	G5	G4	G3	G2	G1	G0	B7	B6	B5	B4	B3	B2	B1	B0
Basic Color	Black	0	0	0	0	0	0	0	0	0	0	0	0	0	0	0	0	0	0	0	0	0	0	0	0
	Red(255)	1	1	1	1	1	1	1	1	0	0	0	0	0	0	0	0	0	0	0	0	0	0	0	0
	Green(255)	0	0	0	0	0	0	0	0	1	1	1	1	1	1	1	1	0	0	0	0	0	0	0	0
	Blue(255)	0	0	0	0	0	0	0	0	0	0	0	0	0	0	0	0	1	1	1	1	1	1	1	1
	Cyan	0	0	0	0	0	0	0	0	1	1	1	1	1	1	1	1	1	1	1	1	1	1	1	1
	Magenta	1	1	1	1	1	1	1	1	0	0	0	0	0	0	0	0	1	1	1	1	1	1	1	1
	Yellow	1	1	1	1	1	1	1	1	1	1	1	1	1	1	1	1	0	0	0	0	0	0	0	0
	White	1	1	1	1	1	1	1	1	1	1	1	1	1	1	1	1	1	1	1	1	1	1	1	1
R	RED(000)	0	0	0	0	0	0	0	0	0	0	0	0	0	0	0	0	0	0	0	0	0	0	0	0
	RED(001)	0	0	0	0	0	0	0	1	0	0	0	0	0	0	0	0	0	0	0	0	0	0	0	0

	RED(254)	1	1	1	1	1	1	1	0	0	0	0	0	0	0	0	0	0	0	0	0	0	0	0	0
	RED(255)	1	1	1	1	1	1	1	1	0	0	0	0	0	0	0	0	0	0	0	0	0	0	0	0
G	GREEN(000)	0	0	0	0	0	0	0	0	0	0	0	0	0	0	0	0	0	0	0	0	0	0	0	0
	GREEN(001)	0	0	0	0	0	0	0	0	0	0	0	0	0	0	0	1	0	0	0	0	0	0	0	0

	GREEN(254)	0	0	0	0	0	0	0	0	1	1	1	1	1	1	1	0	0	0	0	0	0	0	0	0
	GREEN(255)	0	0	0	0	0	0	0	0	1	1	1	1	1	1	1	1	0	0	0	0	0	0	0	0
B	BLUE(000)	0	0	0	0	0	0	0	0	0	0	0	0	0	0	0	0	0	0	0	0	0	0	0	0
	BLUE(001)	0	0	0	0	0	0	0	0	0	0	0	0	0	0	0	0	0	0	0	0	0	0	0	1

	BLUE(254)	0	0	0	0	0	0	0	0	0	0	0	0	0	0	0	0	1	1	1	1	1	1	1	0
	BLUE(255)	0	0	0	0	0	0	0	0	0	0	0	0	0	0	0	0	1	1	1	1	1	1	1	1

AUO Final Spec for Qianfeng

© Copyright AU Optronics Corp. 2022 All Rights Reserved.

5 Signal Timing Specification

5.1 Input Timing

This is the signal timing required at the input of the user connector. All of the interface signal timing should be satisfied with the following specifications for its proper operation.

5.1.1 Timing Table (DE only Mode)

Signal	Item	Symbol	Min.	Typ.	Max	Unit
Vertical Section	Period	Tv	788	810	1015	Th
	Active	Tdisp (v)		768		
	Blanking	Tblk (v)	20	42	247	Th
Horizontal Section	Period	Th	1460	1648	2000	Tclk
	Active	Tdisp (h)		1366		
	Blanking	Tblk (h)	94	282	634	Tclk
Clock	Frequency	Fclk=1/Tclk	53	80	82	MHz
Vertical Frequency	Frequency	Fv	47	60	63	Hz
Horizontal Frequency	Frequency	Fh	43	48	53	KHz

Note1. Display position is specific by the rise of DE signal only.
Horizontal display position is specified by the rising edge of 1st DCLK after the rise of 1st DE, is displayed on the left edge of the screen.

Note2.Vertical display position is specified by the rise of DE after a “Low” level period equivalent to eight times of horizontal period. The 1st data corresponding to one horizontal line after the rise of 1st DE is displayed at the top line of screen

Note3. If a period of DE “High” is less than 1366 DCLK or less than 768 lines, the rest of the screen displays black.

Note4. The display position does not fit to the screen if a period of DE “High” and the effective data period do not synchronize with each other.

AUO Final Spec for Qiangfeng

© Copyright AU Optronics Corp. 2022 All Rights Reserved.

5.1.2 Timing waveform

1366x768_60Hz

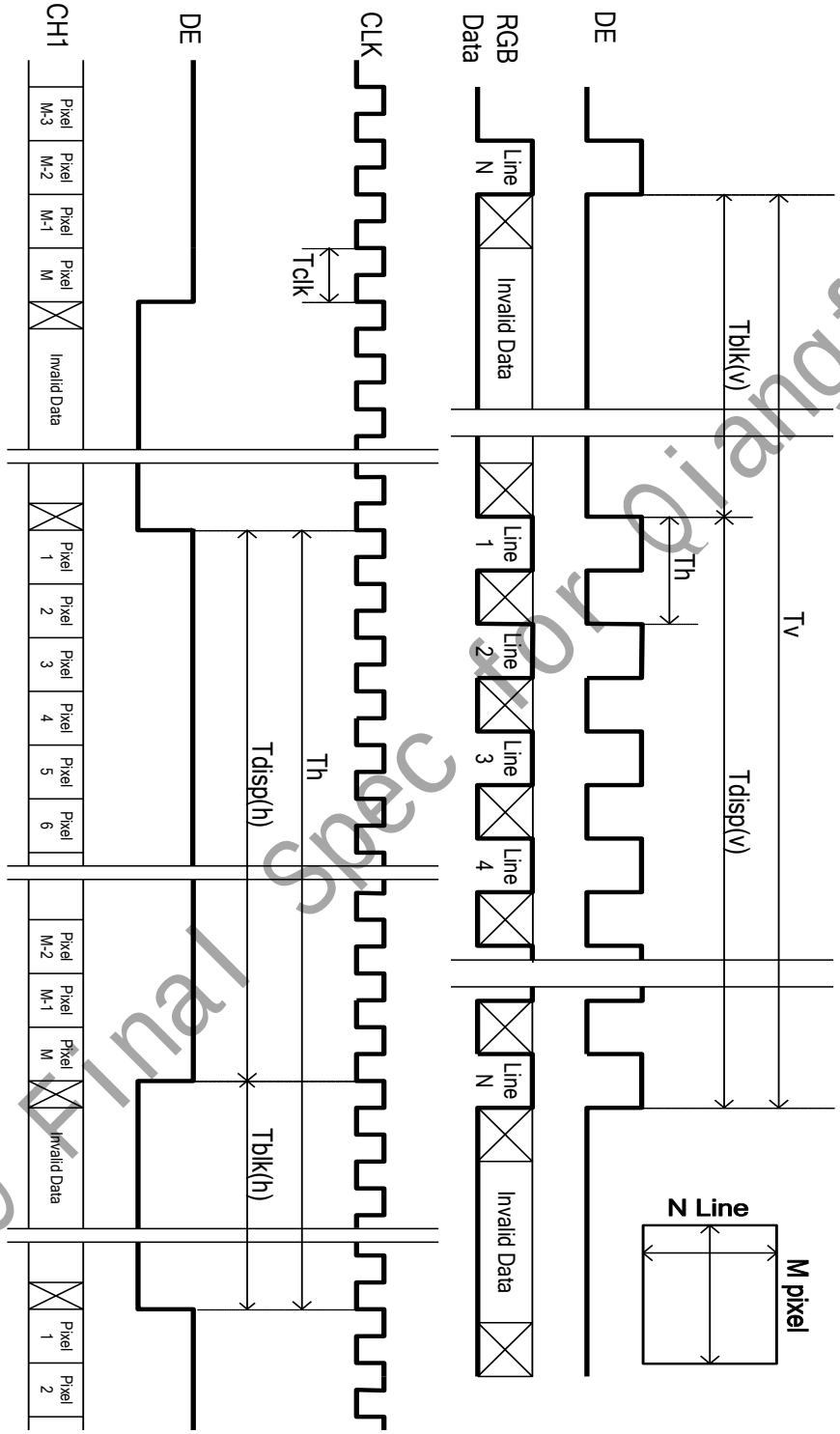

AUO Final Spec for Qiangfeng

© Copyright AU Optronics Corp. 2022 All Rights Reserved.

5.2 Input interface characteristics

Parameter		Symbol	Value			Unit	Note
			Min.	Typ.	Max		
LVDS Interface	Input Differential Voltage	$\lvert V_{ID} \rvert$	200	400	600	mV_{DC}	1
	Differential Input High Threshold Voltage	V_{TH}	+100	--	+300	mV_{DC}	1
	Differential Input Low Threshold Voltage	V_{TL}	-300	--	-100	mV_{DC}	1
	Input Common Mode Voltage	V_{ICM}	1.1	1.25	1.4	V_{DC}	1
	Input Channel Pair Skew Margin	$t_{SKEW\ (CP)}$	-500	--	+500	ps	2
	Input Channel Pair Skew Margin (only for M'Star MST7428BB)	$t_{SKEW\ (CP)}$	-400	--	+400	ps	2
	Receiver Clock : Spread Spectrum Modulation range	Fclk_ss	Fclk -3%	--	Fclk +3%	MHz	3
	Receiver Clock : Spread Spectrum Modulation frequency	Fss	30	--	200	KHz	3
	Receiver Data Input Margin Fclk = 85 MHz Fclk = 65 MHz	tRMG	 -0.4 -0.5	 -- --	 0.4 0.5	ns	4

Note1. VICM = 1.25V

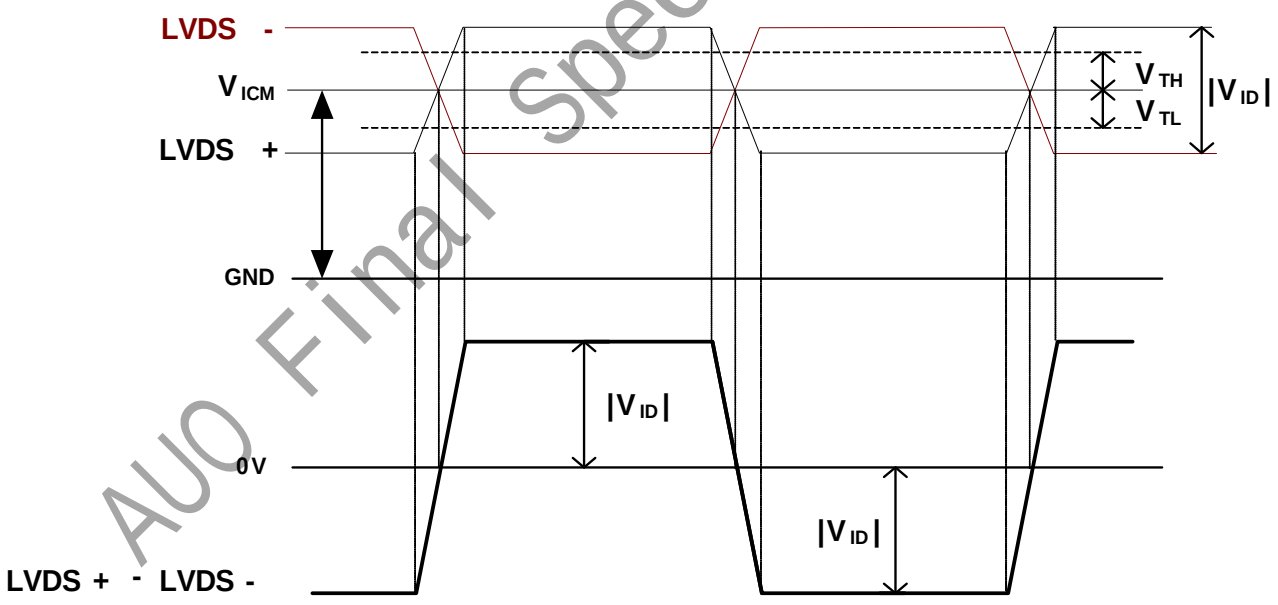

AUO Final Spec for Qiangfeng

© Copyright AU Optronics Corp. 2022 All Rights Reserved.

Note2. Input Channel Pair Skew Margin

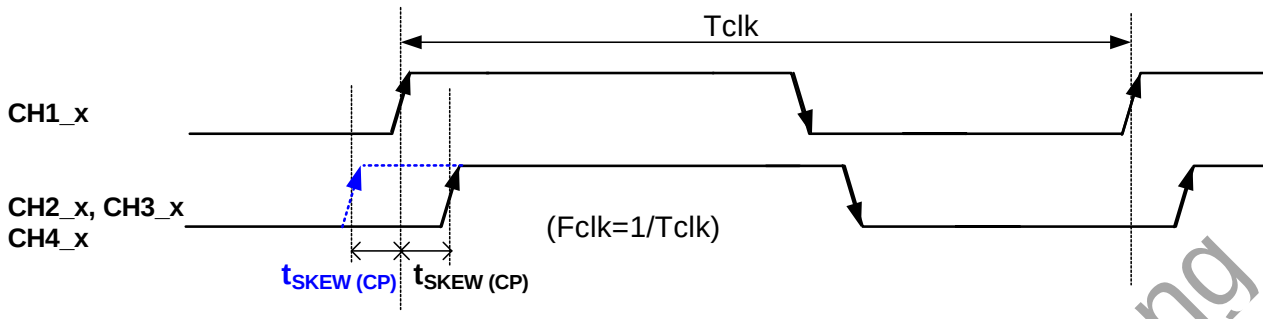

Note3. LVDS Receiver Clock SSCG (Spread spectrum clock generator) is defined as below figures.

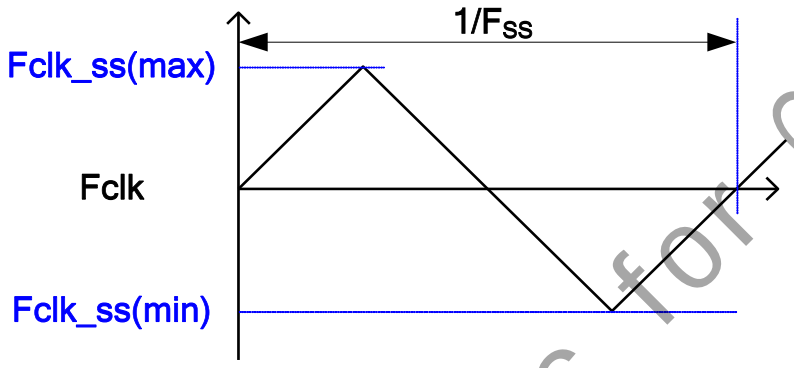

AUO Final Spec for Qiangfeng

© Copyright AU Optronics Corp. 2022 All Rights Reserved.

Note4. Receiver Data Input Margin

Parameter	Symbol	Rating			Unit	Note
		Min	Type	Max		
Input Clock Frequency	Fclk	Fclk (min)	--	Fclk (max)	MHz	**T=1/Fclk**
Input Data Position0	tRIP1	-|tRMG|	0	|tRMG|	ns	
Input Data Position1	tRIP0	T/7-|tRMG|	T/7	T/7+|tRMG|	ns	
Input Data Position2	tRIP6	2T/7-|tRMG|	2T/7	2T/7+|tRMG|	ns	
Input Data Position3	tRIP5	3T/7-|tRMG|	3T/7	3T/7+|tRMG|	ns	
Input Data Position4	tRIP4	4T/7-|tRMG|	4T/7	4T/7+|tRMG|	ns	
Input Data Position5	tRIP3	5T/7-|tRMG|	5T/7	5T/7+|tRMG|	ns	
Input Data Position6	tRIP2	6T/7-|tRMG|	6T/7	6T/7+|tRMG|	ns	

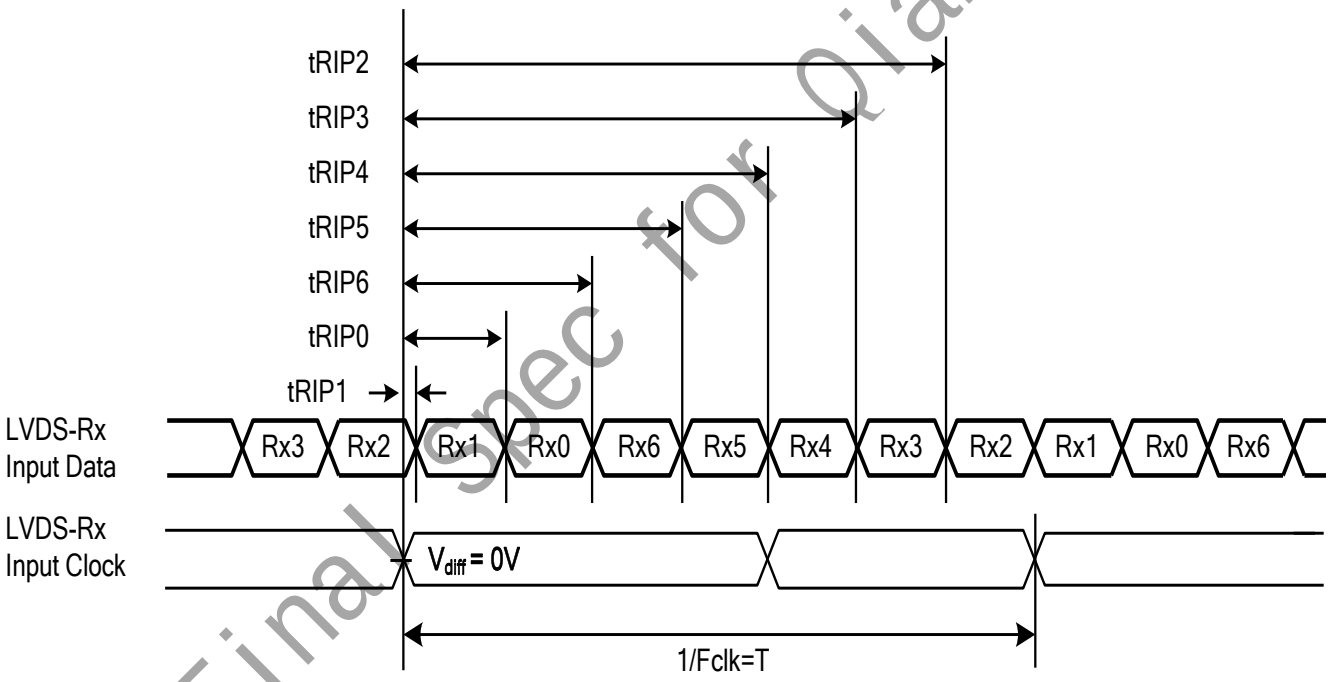

AUO Final spec for Qianfeng

© Copyright AU Optronics Corp. 2022 All Rights Reserved.

5.3 Power Sequence for LCD

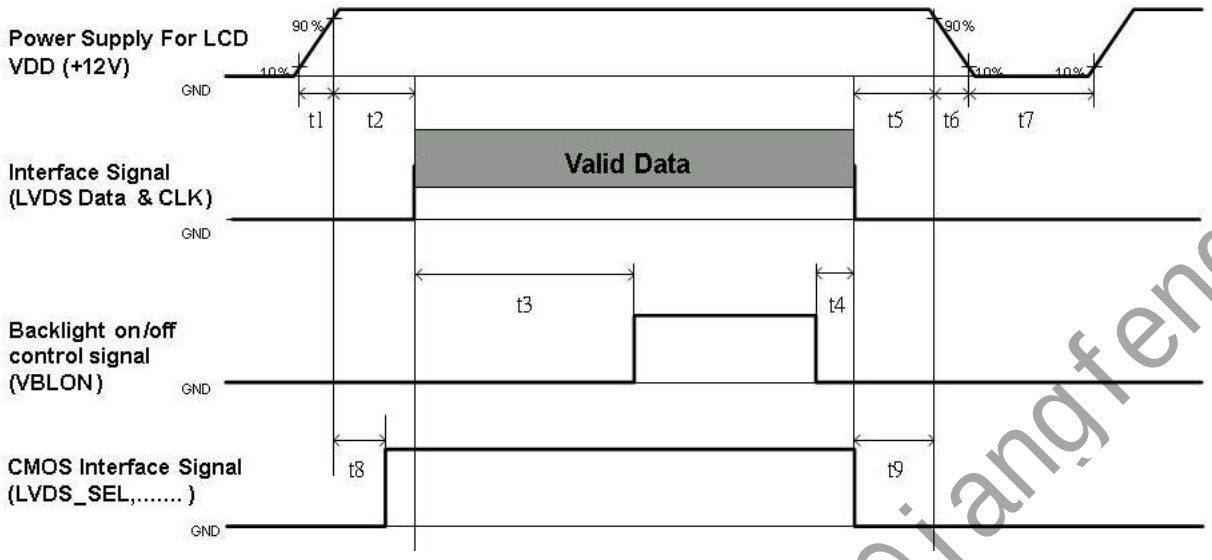

Parameter	Min.	Typ.	Max	Unit
t1	0.4	---	30	ms
t2	40	---	---	ms
t3	640	---	---	ms
t4	0*1	---	---	ms
t5	0	---	---	ms
t6	---	---	---*2	ms
t7	1000*3	---	---	ms
t8	640	---	---	ms
t9	150	---	---	ms

Note:
(1) t4=0 : concern for residual pattern before BLU turn off.
(2) t6 : voltage of VDD must decay smoothly after power-off. (customer system decide this value)
(3) t7 : When the power supply input voltage(VDD) is off, be sure to pull down the valid and invalid data to 0V.

AU0 Final Spec for Qiangfeng

© Copyright AU Optronics Corp. 2022 All Rights Reserved.

6 Mechanical Characteristics

6.1 Open cell and T-con mechanical drawing

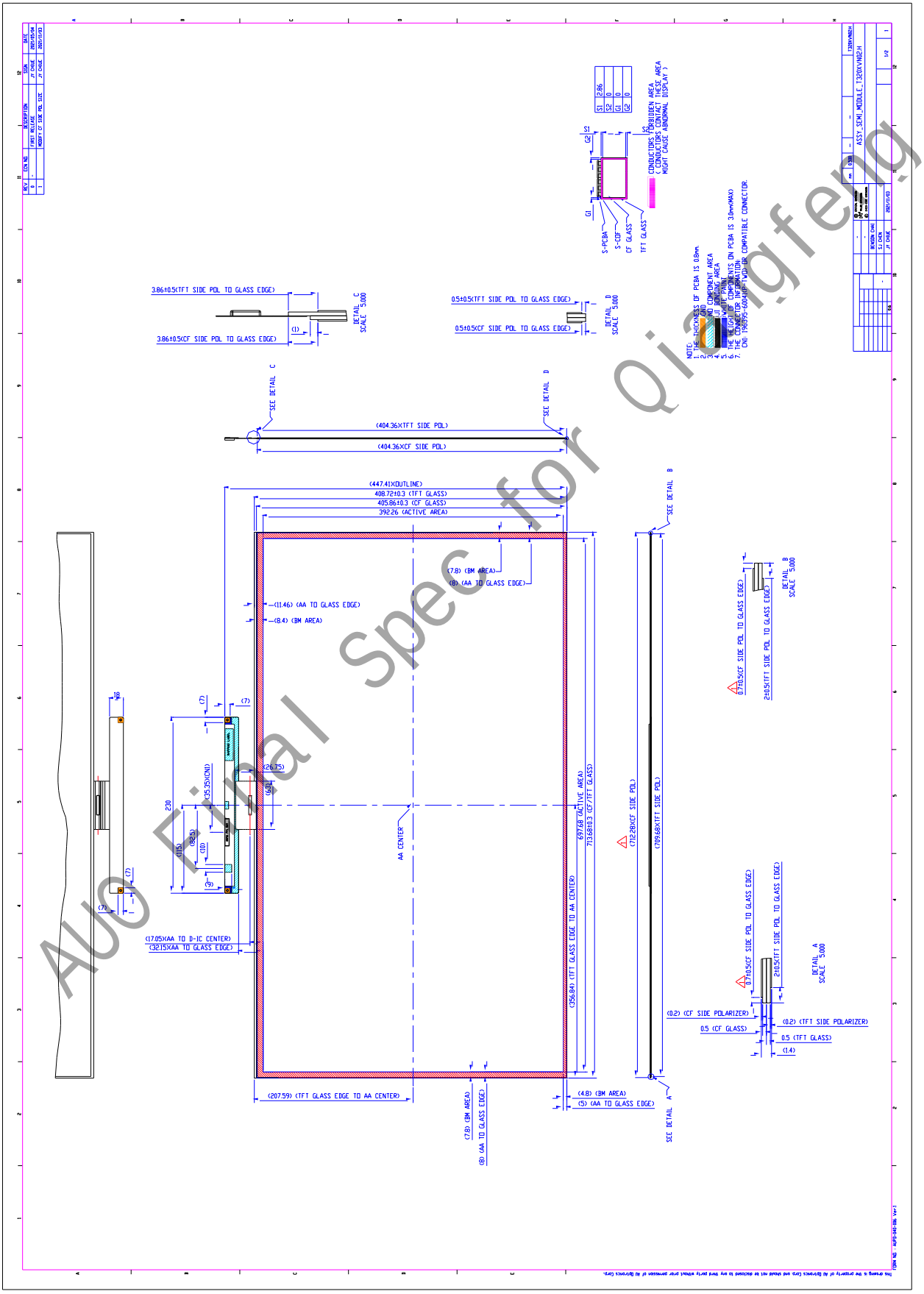

AUO Final Spec for Qiangfeng

© Copyright AU Optronics Corp. 2022 All Rights Reserved.

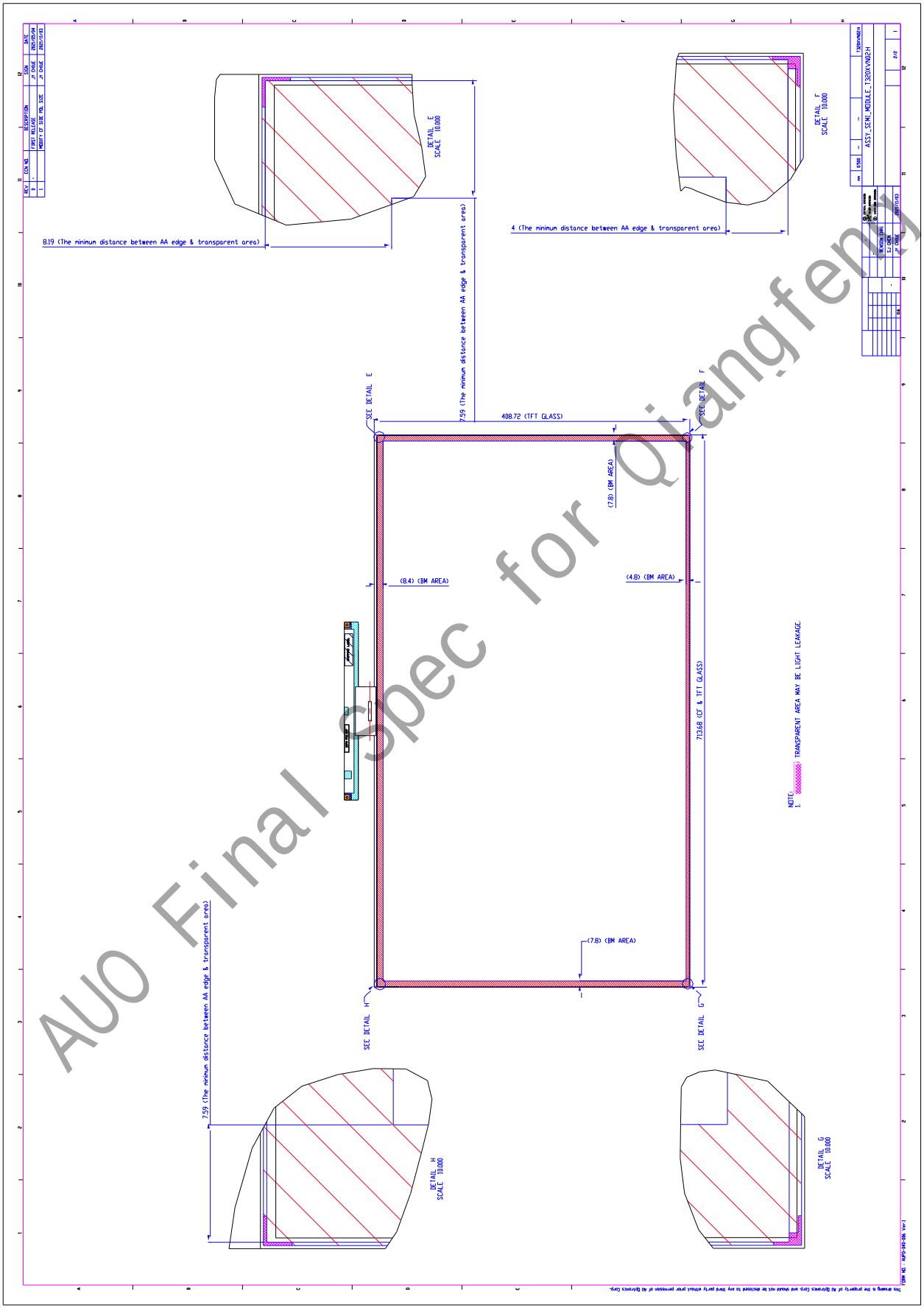

AUO Final Spec for Qiangfeng

© Copyright AU Optronics Corp. 2022 All Rights Reserved.

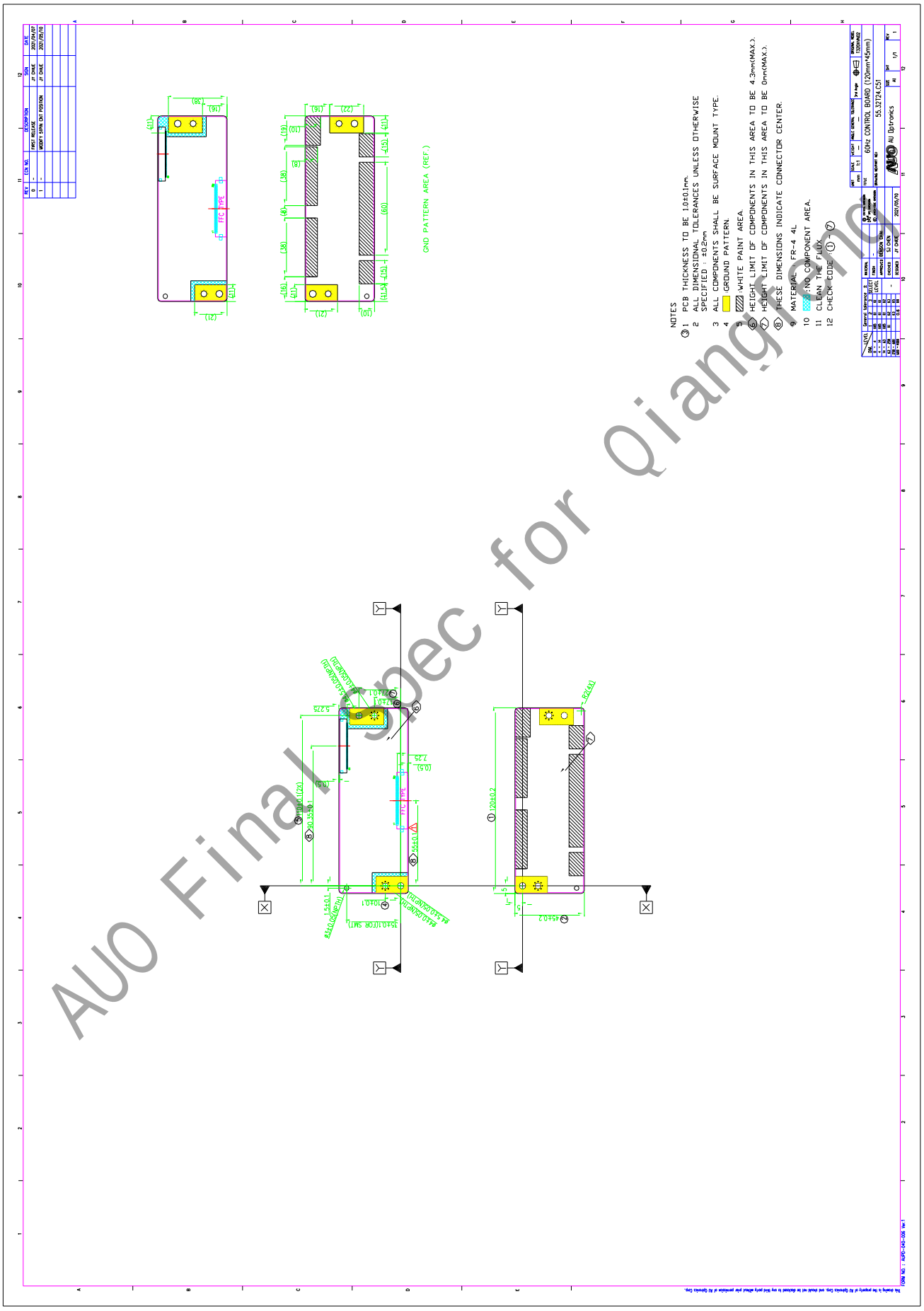

AUO Final spec for Qiangfeng

6.2 FFC Shape and Dimension Recommendation

6.2.1 Connector Type

FFC connector: P-two 196395-60041-3 , STM MSAK24056P60A, STARCONN 112K60-000000-A2-R 60pin or compatible

6.2.2 FFC Drawing

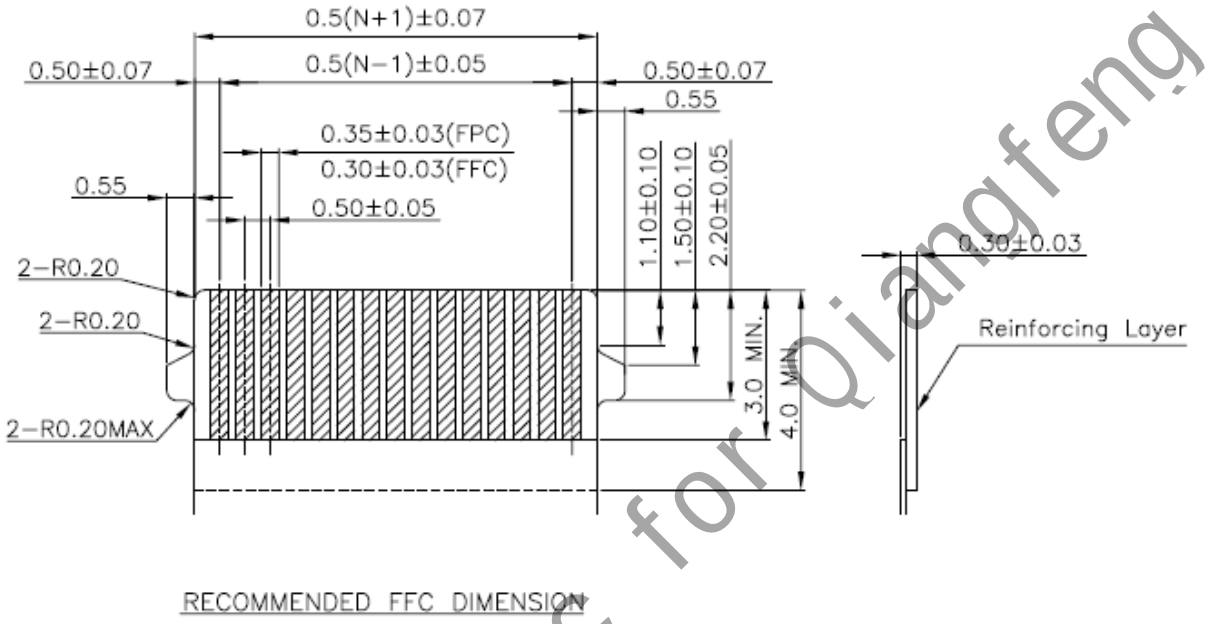

RECOMMENDED FFC DIMENSION

Note1: FFC drawing is provided by connector vendor.

Note2: AUO recommend FFC length ≦ 90mm, with Aluminum foil shield to secure signal integrity and with 100ohm impedance controlled to achieve the optimized impedance matching.

AUO Final Spec for Qiangfeng

© Copyright AU Optronics Corp. 2022 All Rights Reserved.

7. Packing

7-1 Definition of Labels

Open cell shipping label (40*10mm)

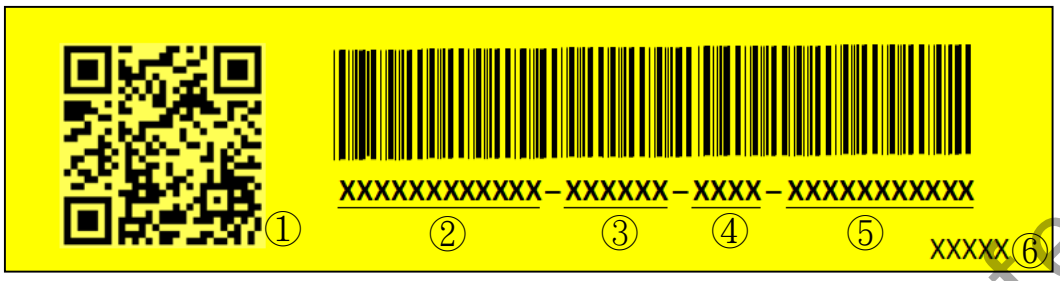

1. QR Code
2. S/N Number
3. AUO Internal Use
4. Manufactured Week
5. Model Name
6. Label SN Number

Carton Label:

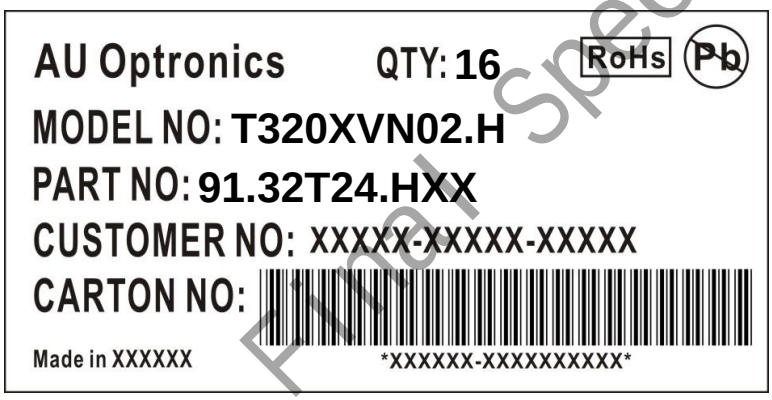

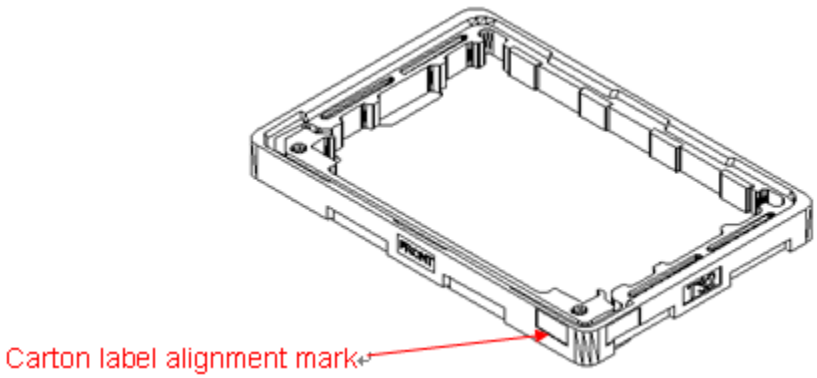

AUO Final Spec for QiangFeng

© Copyright AU Optronics Corp. 2022 All Rights Reserved.

7-2 Packing Method

Packing Process:

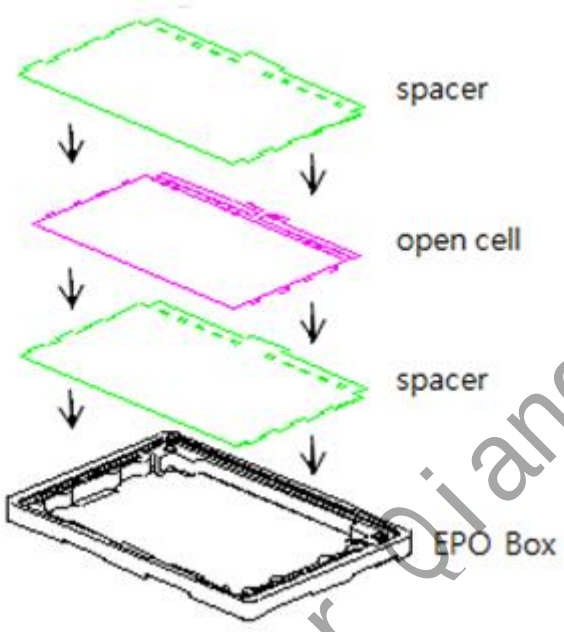

16 pcs of SKD & **17** pcs (Includes 1PC*5mm, Top EPE) of spacers per 1 box

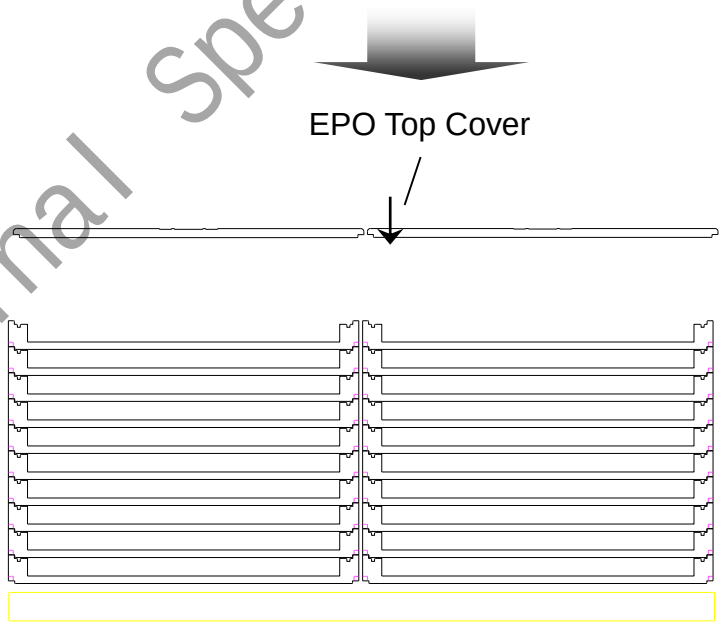

Pallet Dimension：**1150** x **910** x**132** mm

20 Boxes/Pallet, after stack **20**boxes, then put EPO top cover on it.

AUO Final Spec for Qiangfeng

© Copyright AU Optronics Corp. 2022 All Rights Reserved.

7-3 Pallet and Shipment Information

	Item	Specification			Packing Remark
		Qty.	Dimension	Weight (kg)	
1	Packing BOX	16cs/box	890(L)*570(W)*115(H)	15.8 kg	without top cover
2	Pallet	1	1150(L)*910(W)*132(H)	13.8±2.1kg	
3	Boxes per Pallet	20 boxes/pallet			
4	Panels per Pallet	320pcs/pallet			
5	Pallet after packing	320(by Air)	1150(L)*910(W)*1222(H)	329.8kg (by Air)	with top cover
		640(by Sea)	1150(L)*910(W)*2584 (H)mm	659.6kg (by Sea)	with top cover, 40ft HQ

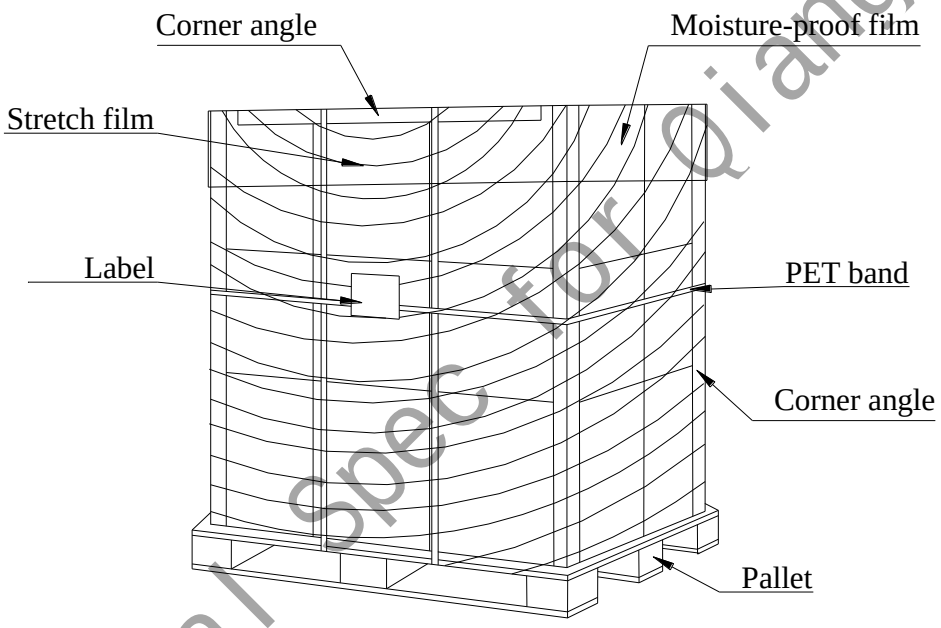

AUO Final Spec for QiangFeng

© Copyright AU Optronics Corp. 2022 All Rights Reserved.

8. Precautions

Please pay attention to the followings when you use this TFT LCD Open Cell unit and strongly recommended to contact AUO if module process advice is required.

8.1 Storage

When storing open cell units, the following precautions are necessary.

(a) Store them in a dark place. Do not expose the open cell unit to sunlight or fluorescent light.

(b) Store them at the advised storage temperature between 5℃ and 35℃ at normal humidity(35%rH~75%rH).

(c) The polarizer surface should not come in contact with any other object. It is recommended that they be stored in the container in which they were shipped.

(d) Be careful of condensation. Condensation makes damage to polarizer or electrical contacted parts. And after fading condensation, smear or spot will occur.

8.2 Module Assembly

8.2.1 Protection film peeling

(a) The protection films of polarizer had attached on the both sides of open cell polarizer surfaces. Handlers should peel them off with care. While the protection film is being peeled off, static electricity is easily generated on the polarizer surface. Please follow the instructions listed below to reduce ESD failure risk.

(b) People who handle the unit should wear antistatic wristbands on hands. The band should be connected to the common ground with a current limiting resistor which is most commonly one megohm, rated at least 1/4 watt with a working voltage rating of 250 volts.

(c) Connect the grounded pads on source PCB to ground with less than 1 ohm resistance as below figure.

(d) The peeling direction is recommended in below figure.

(e) During peeling off process, ionized air should continuously & stably be blown on the surfaces of protection film and polarizer. The flow rate of ionized air should be monitored periodically.

(f) It is recommended to peel protection films off as slowly as possible. (constant speed more than 8 seconds per film.)

(g) The protection film should not be contacted to the IC(source and gate) or source PCB.

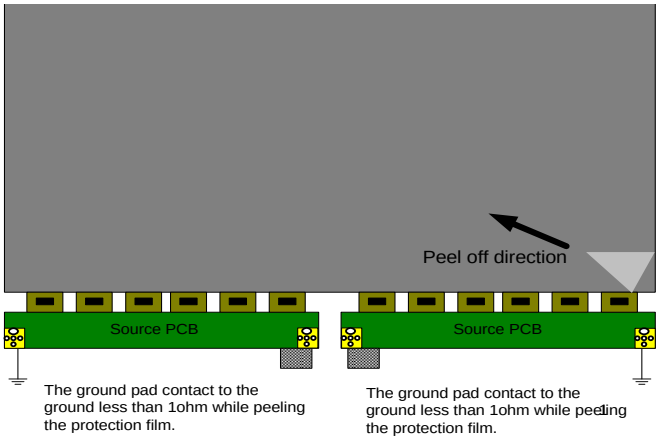

AUO Final Spec for Qiangfeng

© Copyright AU Optronics Corp. 2022 All Rights Reserved.

8.2.2 Assembly Precautions

(a) Remove the stains with finger-stalls wearing soft gloves in order to keep the display clean in the process of the incoming inspection and the assembly process. When the surface becomes dusty, please wipe gently with absorbent cotton or other soft materials like chamois soaks with petroleum benzene. Normal-hexane is recommended for cleaning the adhesives used to attach front/ rear polarizers. Do not use acetone, toluene and alcohol because they cause chemical damage to the polarizer.

(b) Do not touch, push or rub the exposed polarizers with glass, tweezers or anything harder than HB pencil lead. And please do not rub with dust clothes with chemical treatment. Do not touch the surface of polarizer with bare hands or greasy clothes. (Some cosmetics are detrimental to the polarizer.)

(c) Use the tray to transport open cell can prevent open cell broken and electrical components damage.

(d) You should consider the mounting structure so that uneven force (ex. Twisted stress) is not applied to the cell. And the frame on which a cell is mounted should have sufficient strength so that external force is not transmitted directly to the cell

(e) Be careful not to give any extra mechanical stress to the panel when designing the set, and BLU kit.

(f) Do not use cover case which made of acetic acid type and chlorine type materials because acetic acid type materials generates corrosive gas which will damage the polarizer at high temperature and chlorine type materials causes circuit break by electro-chemical reaction.

(g) When the panel kit and BLU kit are assembled, the panel kit and BLU kit should be attached to the set system firmly by combining each mounted holes. Be careful not to give the mechanical stress. Electrostatic discharge may easily damage the electronic circuits on the open cell unit. Make certain that treatment persons are grounded, (ex: anti-static wristband or etc) and don't touch interface pin directly.

8.2.3 FFC & PCB Precautions

(a) Refrain from applying any forces to the source PCB and the drive IC in the process of the handling or installing to the set. If any forces are applied to the product, it may cause damage or a malfunction in the panel kit.

(b) Do not pull, fold or bend the source COF and the gate COF in any processes.

(c) This panel has its circuitry of PCB's on the rear side, so it should be handled carefully in order for a force not to be applied.

(d) Do not touch the pins of the interface connector directly with bare hands.

(e) The connector is a precision device to connect PCB and transmit electrical signals. Operators should plug/un-plug the connector in parallel way during module assembly.

(f) The cables between TV SET connector and Control PCB interface should be connected directly to have a minimized length. A longer cable between TV SET connector and Control PCB interface maybe operate abnormal display.

8.2.4 Flicker adjust

In order to prevent potential problems, flicker should be adjusted by optimizing the Vcom value in customer LCM Line through the I2C Interface. Detail settings please refer to appendix section.

AUO Final Spec for QiangFeng

© Copyright AU Optronics Corp. 2022 All Rights Reserved.

8.3 Aging

Be sure to age for over 1 hour at least, which the product is driving initially to stabilize TFT Characteristic.

8.4 Operating Precautions

(a) Be cautious not to give any strong mechanical shock or any forces to the panel kit. Applying any forces to the panel may cause the abnormal operation or the damage to the panel kit and the back light unit kit.

(b) Avoid the condensation of water which may result in the improper operation of product.

(c) It is recommended to operate the LCD product under the normal conditions as below:

- VDD=12V
- Temperature=25±10℃
- Display pattern : continually changing pattern

(d) Response time depends on the temperature. (In lower temperature, it becomes longer)

(d) If the product will be used under extreme conditions such as under high temperature, humidity, display patterns or the operation time etc.., it is strongly recommended to contact AUO for the advice about the application of engineering. Otherwise, its reliability and the function may not be guaranteed. Extreme conditions are commonly found at airports, transit stations, banks, stock markets, and controlling systems.

8.5 Others

(a) Module designer should apply adequate thermal solutions to keep the electrical components surface temperature under control limit (ex: Source Driver IC 100℃, Components on T-con PCB 85℃) Operations over the temperature can cause damages or decrease of lifetime.

(b) Protect the TFT LCD open cell unit out of the static electricity in all process. Otherwise the circuit IC could be damaged.

Reference: The environment ESD control standard of AUO

Item	Control standard
ESD	All environment ESD controlled under 200V
Ground resistance	All equipment ground should be less than 1ohm.

(b) Note that polarizer could be damaged easily. Do not press or scratch the bare surface with the material which is harder than a HB pencil lead.

(c) Wipe off water droplets or oil immediately. If you leave the droplets for a long time on the product, the stain or the discoloration may occur.

(d) If the surface of the polarizer is dirty, clean it using the absorbent cotton or the soft cloth.

(e) If the liquid crystal material leaks from the panel, this should be kept away from the eyes or mouth. If this contacts to hands, legs, or clothes, you must washed it away with soap thoroughly and see a doctor for the medical examination.

(f) The module has high frequency circuits. The sufficient suppression to the electromagnetic interference should be done by the system manufacturers. The grounding and shielding methods is important to minimize the interference. The sufficient suppression to the EMI should be done by the set manufacturers.

AUO Final Spec for Qiangfeng

© Copyright AU Optronics Corp. 2022 All Rights Reserved.

Appendix I – Vcom adjustment

VCOM I2C Tuning Steps

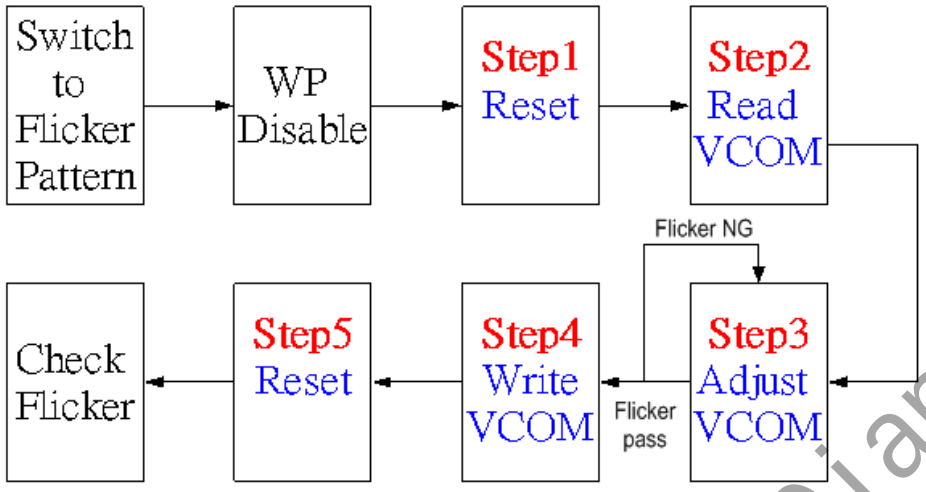

Step to step interval must follow below figure

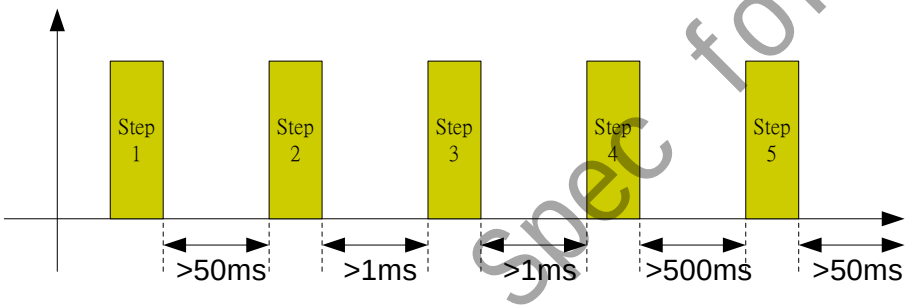

Flicker Pattern

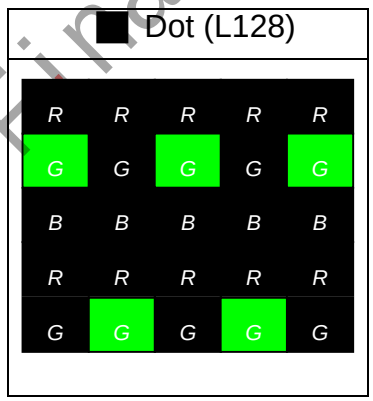

WP function

	Writable	Protection	Default (NC)
WP	H	L	L

AUO Final Spec for Qiangfeng

© Copyright AU Optronics Corp. 2022 All Rights Reserved.

Adjust SOP

Step1 Reset

* Device Address is 0x74 (7Bits)

S	Slave Address	W	A	Index Address 0	A	Control Byte	A	P
	1 1 1 0 1 0 0 0			0 0 0 0 0 0 0 0		0 0 0 1 0 0 1 0		
	0xE8			0x00		0x12		
	Device Address + W			Control Address		Reset + OUT_EN		

Step2 Read VCOM

* Data = 7Bits

S	Slave Address	W	A	Index Address 1	A	S	Slave Address	R	A	DATA	NA	P
	1 1 1 0 1 0 0 0			0 0 0 0 0 0 0 1			1 1 1 0 1 0 0 1			X X X X X X X X		
	0xE8			0x01			0xE9			Data		
	Device Address + W			VCOM Address			Device Address + R					

Step3 Adjust VCOM

* DVCOM = 8Bits

S	Slave Address	W	A	Index Address 1	A	DVCOM	A	P
	1 1 1 0 1 0 0 0			0 0 0 0 0 0 0 1		0000000X~1111111X		
	0xE8			0x01		0x00~0xFF		
	Device Address + W			VCOM Address		VCOM value		

Step4 Write VCOM

S	Slave Address	W	A	Index Address 0	A	Control Byte	A	P
	1 1 1 0 1 0 0 0			0 0 0 0 0 0 0 0		0 0 0 0 1 0 1 0		
	0xE8			0x00		0x0A		
	Device Address + W			Control Address		Write DAC to NVM+ OUT_EN		

Step5 Reset

* Device Address is 0x74 (7Bits)

S	Slave Address	W	A	Index Address 0	A	Control Byte	A	P
	1 1 1 0 1 0 0 0			0 0 0 0 0 0 0 0		0 0 0 1 0 0 1 0		
	0xE8			0x00		0x12		
	Device Address + W			Control Address		Reset + OUT_EN		

AUO Final Spec for Qiangfeng

© Copyright AU Optronics Corp. 2022 All Rights Reserved.