Important Note

Read All Sections Before You Start

For the latest information, please visit our website @ www.Forestaroutdoor.com

Prior to installing any composite siding system, it is recommended that you check with local building codes for any special requirements or restrictions. The diagrams and instructions outlined in this guide are for illustration purposes only and are not meant or implied to replace a licensed professional. Any construction or use of Forestar products must be in accordance with all local zoning and/or building codes. The consumer assumes all risks and liability associated with the construction and use of this product.

Safety

When dealing with any type of construction project, it is necessary to wear appropriate safety equipment to avoid any risk of injuries. Forestar recommends but is not limited to the following safety equipment when handling, cutting, and installing Forestar products: gloves, respiratory protection, long sleeves, pants, shoes and safety glasses.

Tools

Standard woodworking tools may be used. It is recommended that all blades have a carbide tip. Standard stainless steel or acceptable coated screws are recommended.

Environment

A clean, smooth, flat, and strong surface is needed for the proper installation of Forestar products. Always check with local building codes before installing any type of product. If installation does not occur immediately, Forestar products need to be put on a flat surface at all times. It should NEVER be put on a surface that is NOT flat.

Planning

Plan a layout for your siding before starting it to ensure the best possible looking siding for your project. Building codes and zoning ordinances generally apply to permanent structures, meaning anything that is anchored to the ground or attached to the house. So nearly every kind of siding requires permits and inspections from a local building department. We recommend drawing out a site plan of your proposed project that you intend to do to minimize errors and make your perfect siding.

Pressure wash on a scrap piece of composite material before using a pressure washer on the siding board to make sure that your pressure setting will not damage the UltraShield capped layer.

Construction

Forestar is NOT intended for use as columns, supporting posts, beams, joist stringers, support against a force , or other primary load-bearing members. Forestar must be supported by a code-compliant substructure. While Forestar products are great for retrofits, Forestar's products CANNOT be installed on existing siding boards.

Ventilation

Forestar products CANNOT be directly installed onto a flat surface. It must be installed onto a substructure, so there is adequate and unobstructed air flow under the siding to prevent excessive water absorption. A minimum of 1" of continuous net free area under the siding surface is required for adequate ventilation on all siding, so air can circulate between adjacent members to promote drainage and drying.

Heat and Fire

Excessive heat on the surface of Forestar's products from external sources such as but not limited to fire or reflection of focusing sunlight from some optical objects can potentially harm Forestar products. This extreme elevation of surface temperatures, which exceeds that of normal exposure, can possibly cause Forestar products to melt, sag, warp, discolor, increase expansion / contraction, and accelerate weathering.

Fasteners

When fastening Forestar's products all screws that are face fastened should always be driven in at a 90-degree angle to the siding surface. Toe screwing is not recommended for Forestar products. Man extra furring strip should be added if a 90-degree angle is not achievable. All fasteners should be on their own independent furring strip. When two board-ends meet each other (butt-joint),additional blocking is needed.

Use white chalk, straight boards, or string lines as templates for straight lines. NEVER USE COLORED CHALK. COLORED chalk can permanently stain Forestar's products and is strongly discouraged.When selecting proper fasteners for your project, it is essential to choose those specifically engineered for composite material., as they are designed to provide the best performance and appearance for Forestar products. For most installations, we recommend using stainless steel screws to ensure durability and corrosion resistance. In specific scenarios, such as face fastening the last board, composite decking screws with color-matched heads may be used to blend seamlessly with the material. For a cleaner, more professional finish, ensure screws are installed flush with the surface and avoid over-tightening. Using screws not recommended for composite material may damage or compromise the integrity of the siding. For guidance, refer to page 5 for a list of recommended fasteners tailored to your substrate.

Pre-drill

When fastening into composite material, pre-drilling is strongly recommended to avoid potential bulging or mushrooming around the screw head. Pre-drilled holes should be slightly larger than the screw thread (1/16" to 5/64") to allow for secure fastening, but smaller than the screw head for a snug fit.

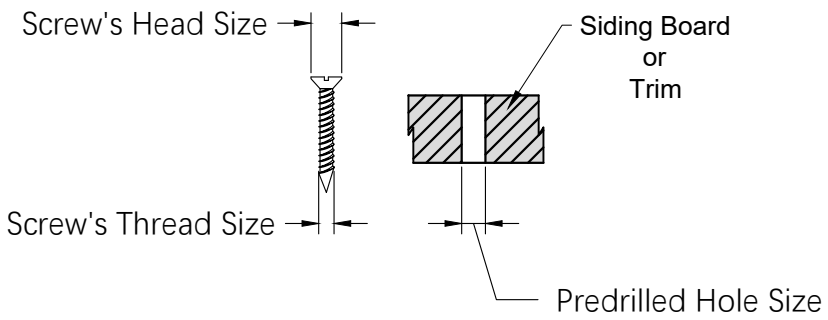

Board and Batten Siding Parts

Code no.	Description	Diagram
AW08	Used at every furring strip to fix each board onto the furring strip.	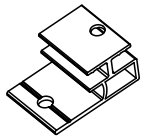
US86	Board and Batten Siding Board	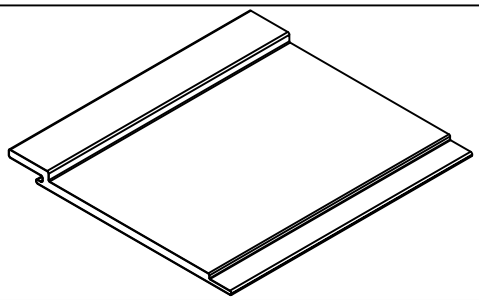
US44	F-Trim, used for the US86 overlapping installation on the outermost edges	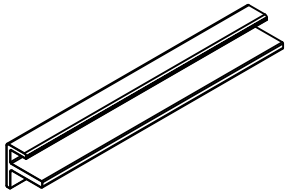
US46	Outside Corner Trim, used for the US86 installation on the Outside corners	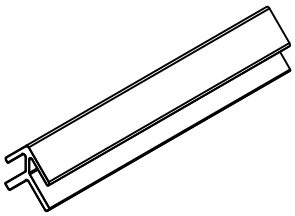
US47	Inside Corner Trim, used for the US86 installation on the inside corners	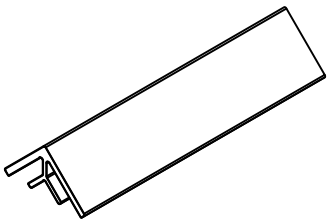
US73	F-Trim, capped the top or butt joint installation	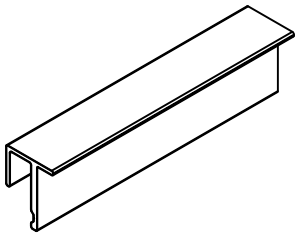

Siding Screws
(For Wood Furring Strip)

The table below shows the screws recommended to use for the installation, but not included.

Code no.	Description	Diagram
#6 x 1-1/4" Stainless Steel SS304 (Bugle Head)	Locking the board into the **Forestar** Clip (AW08)	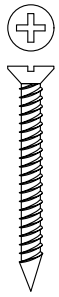
#8 x 3" Stainless Steel SS304 (Bugle Head) **depends on the thickness of your furring strips	Used to secure furring strips to the wall.	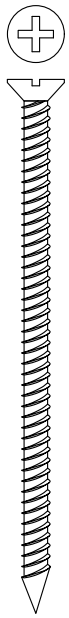
#8 x 1-1/4" Stainless Steel SS304 (Bugle Head)	Used when installing the Clip (AW08-BK) onto the wood furring strip. Or used when face screwing the boards and the trims onto the wood furring strips.	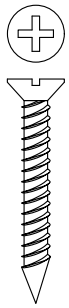
#8 x 1-1/4" Stainless Steel SS304 (Pan Head)	Used for securing the Rubber Stopper (T-7) onto the wood furring strips.	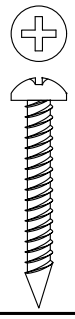

Siding Screws
(For Aluminum Furring Strip)

The table below shows the screws recommended to use for the installation, but not included.

Code no.	Description	Diagram
#6 x 1-1/4" Stainless Steel SS304 (Bugle Head Self Tapping)	Locking the board into the Forestar Clip (AW08)	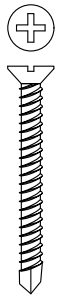
#8 x 3" Stainless Steel SS304 (Bugle Head Self Tapping) **depends on the thickness of your furring strips	Used to secure furring strips to the wall.	
#8 x 1-1/4" Stainless Steel SS304 (Bugle Head Self Tapping)	Used when installing the Clip (AW08-BK) onto the aluminum furring strip. Or used when face screwing the boards and the trims onto the aluminum furring strips.	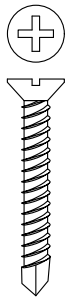
#8 x 1-1/4" Stainless Steel SS304 (Pan Head Self Tapping)	Used for securing the Rubber Stopper (T-7) onto the aluminum furring strips.	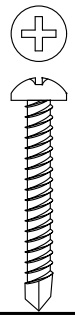

* Note: All screws are based on our recommendation and if the installation requires something different than what is shown, a professional should be consulted before installing. The following installation guide will use the above screw sizes.

Under Construction

We recommend using aluminum or pressure treated wood for the under-construction backing system. Each siding board must be supported by a solid surface or furring strip, spaced no more than 16 inches apart, center to center.

Extra attention is required to ensure adequate backing is provided around obstacles such as windows, fascia, soffits, gutters, ventilation points, and other structural features. below is an example of the typical layers involved in a standard installation; however, a licensed professional should always be consulted to ensure proper techniques and compliance with building codes.

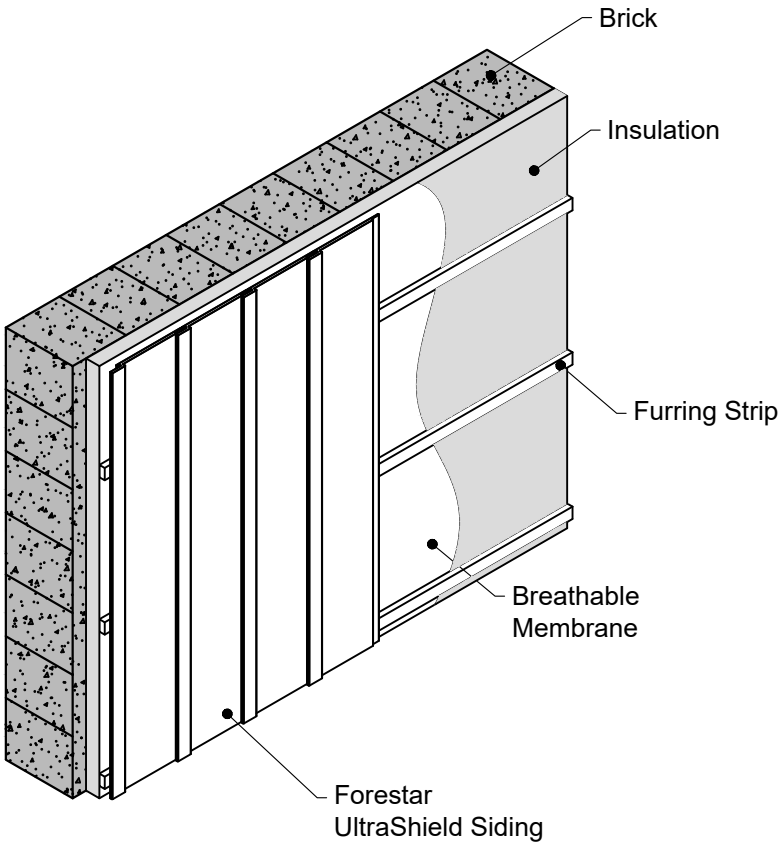

Furring Strips Installation

A building professional should be consulted regarding vapor barrier and insulation for your project. Where a vapor barrier is to be used, it should be a breathable type and must be positioned behind the furring strips. The furring strips need to have a minimum thickness of nominal 1" (3/4" actual).

Furring Strips should be attached with screws at a maximum of 12" on center for the vertical siding installation. All furring strips need to be flat and level against the wall surface, use shims if necessary.

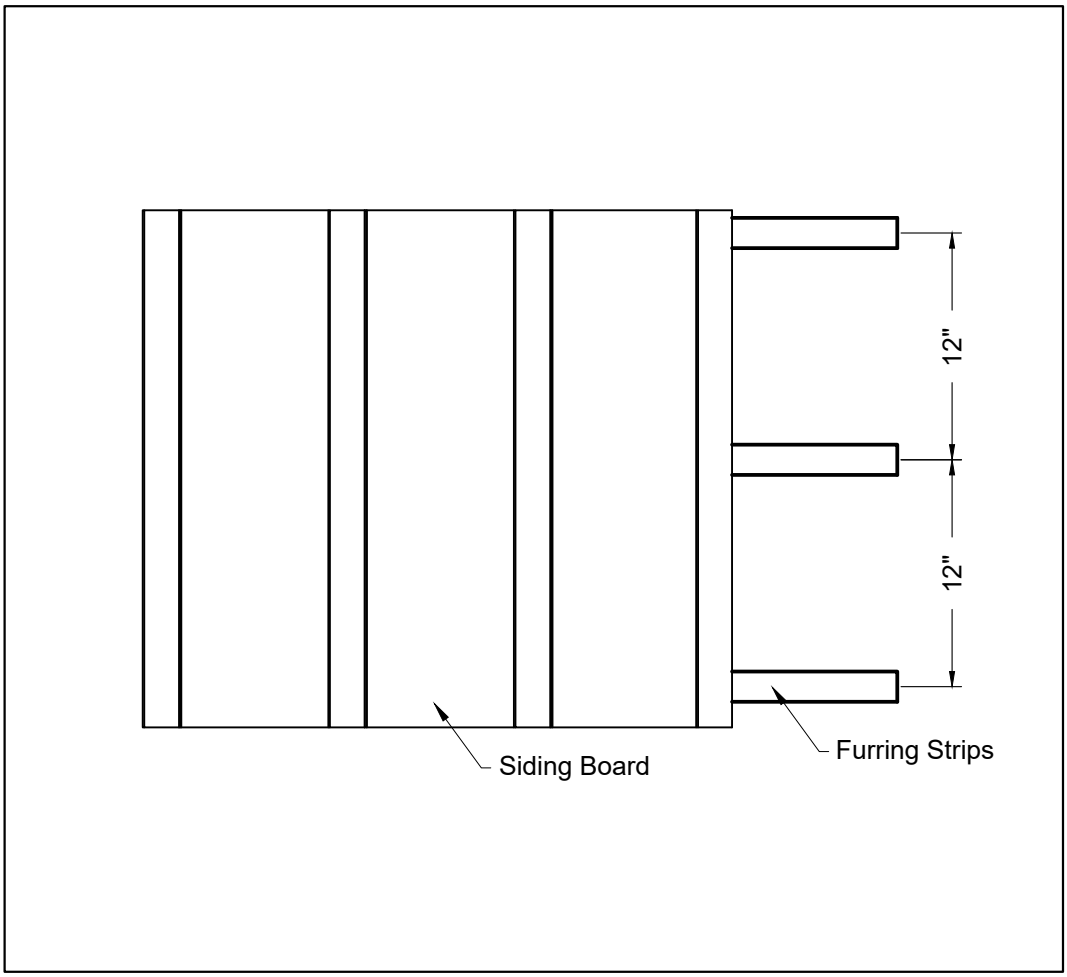

Expansion and Contraction Values

Forestar siding boards will expand and contract with changes in temperature. Expansion and contraction are most significant where extreme temperature changes occur. Consider the following table when installing Forestar products.

Expansion and Contraction Values Table

Installation Temperature (Farhenheit)	Length (Feet)								
	3	8	9	10	12	13	16	18	
32	1/16	1/8	1/8	3/16	3/16	1/4	1/4	5/16	Gap (in)
41	1/16	1/8	1/8	1/8	3/16	3/16	1/4	1/4	
50	1/16	1/8	1/8	1/8	1/8	3/16	3/16	3/16	
59	1/16	1/16	1/16	1/8	1/8	1/8	1/8	3/16	
68	3/64	1/16	1/16	1/16	1/16	1/8	1/8	1/8	
77	3/64	1/16	1/16	1/16	1/16	1/16	1/16	1/16	
86	3/64	3/64	3/64	3/64	3/64	1/16	1/16	1/16	

Locking the Siding Board

When working with composite material, you must allow for expansion and contraction caused by temperature changes. The board needs to be "locked" using a secondary screw in the following manner:

Please Note:
Impact Driver Tool is prohibited for siding installation to avoid the board from damage by the impact force.

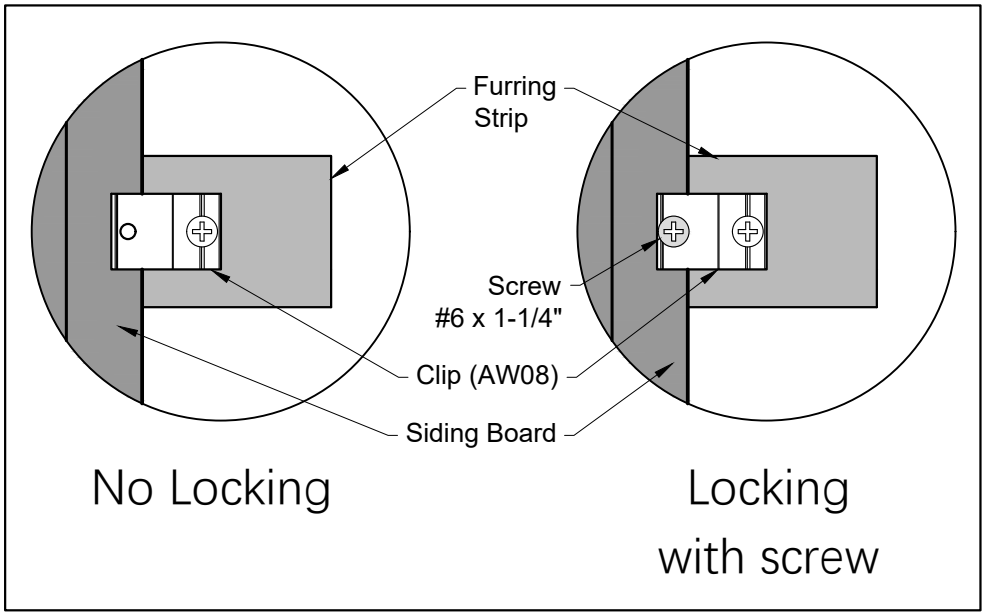

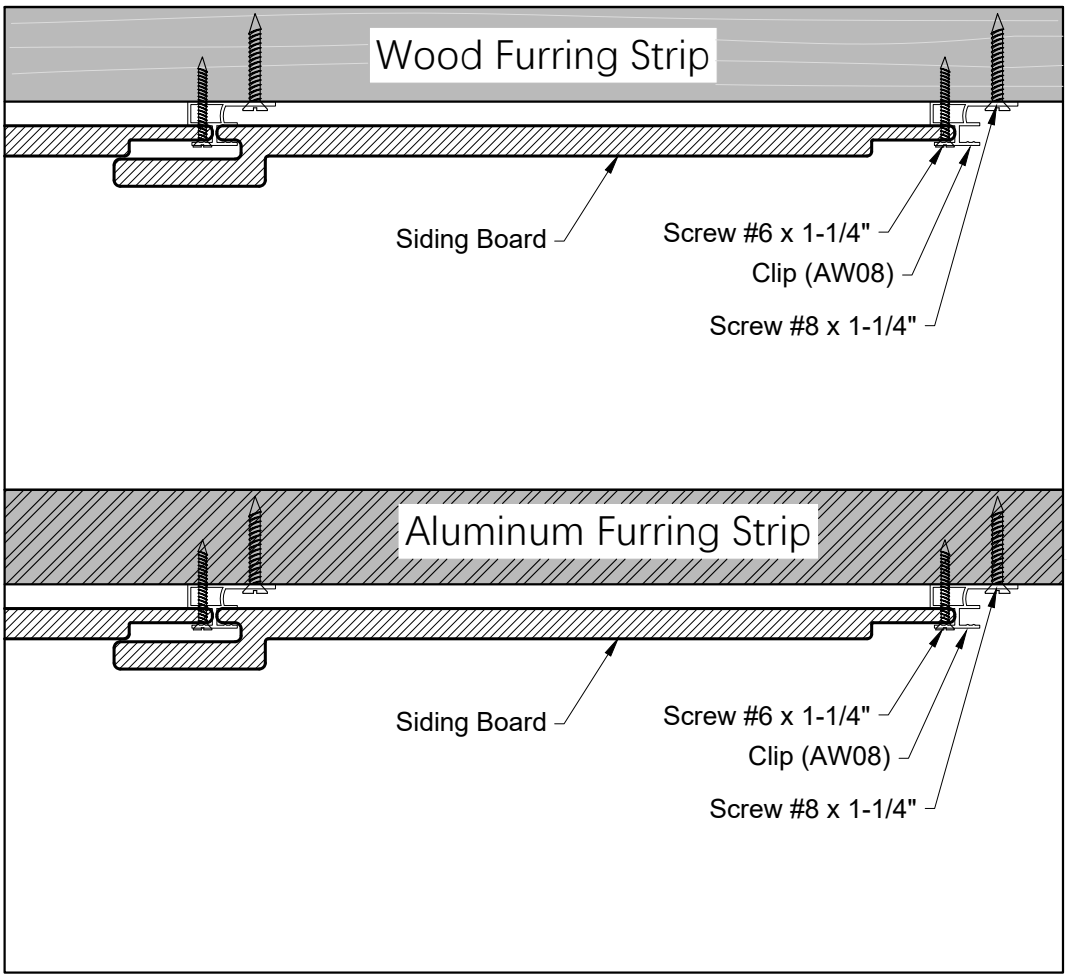

When installing vertically, it is required to lock the first and second Clip (AW08) starting from the bottom of the board. And use an aluminum angle or equivalent at the bottom of the board to support it, as shown in the diagrams below.

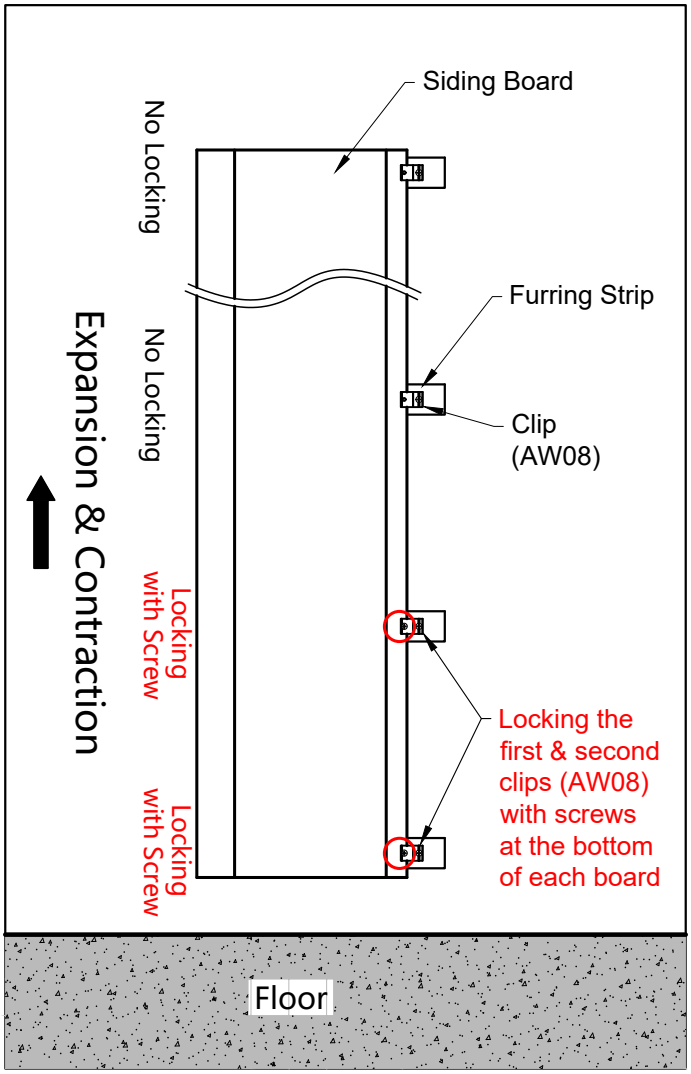

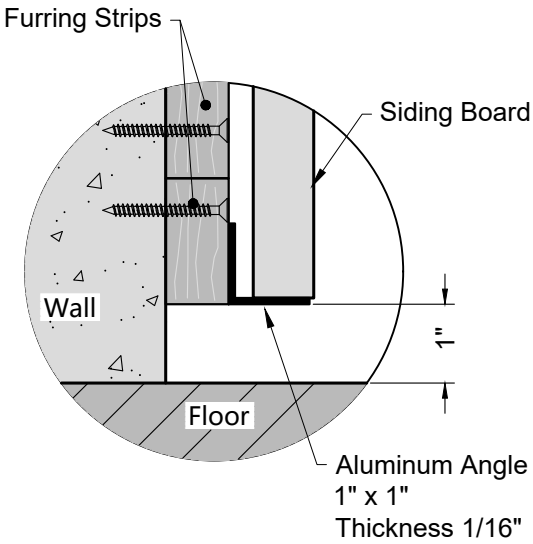

Installation Procedure

Step 1: Framing

- **Measure and Chalk lines for the furring strips**
- **Install the furring strips**
- **Install the bottom aluminum angles**

Step 2: Trims installation

Step 3: First siding board installation

Step 4: Remaining boards installation

Step 5: Install the last siding board

Step 1: Framing

The frame needs to be level before installing the siding boards. The diagram below shows the wall replicating different scenarious potentially occuring when installing the siding boards.

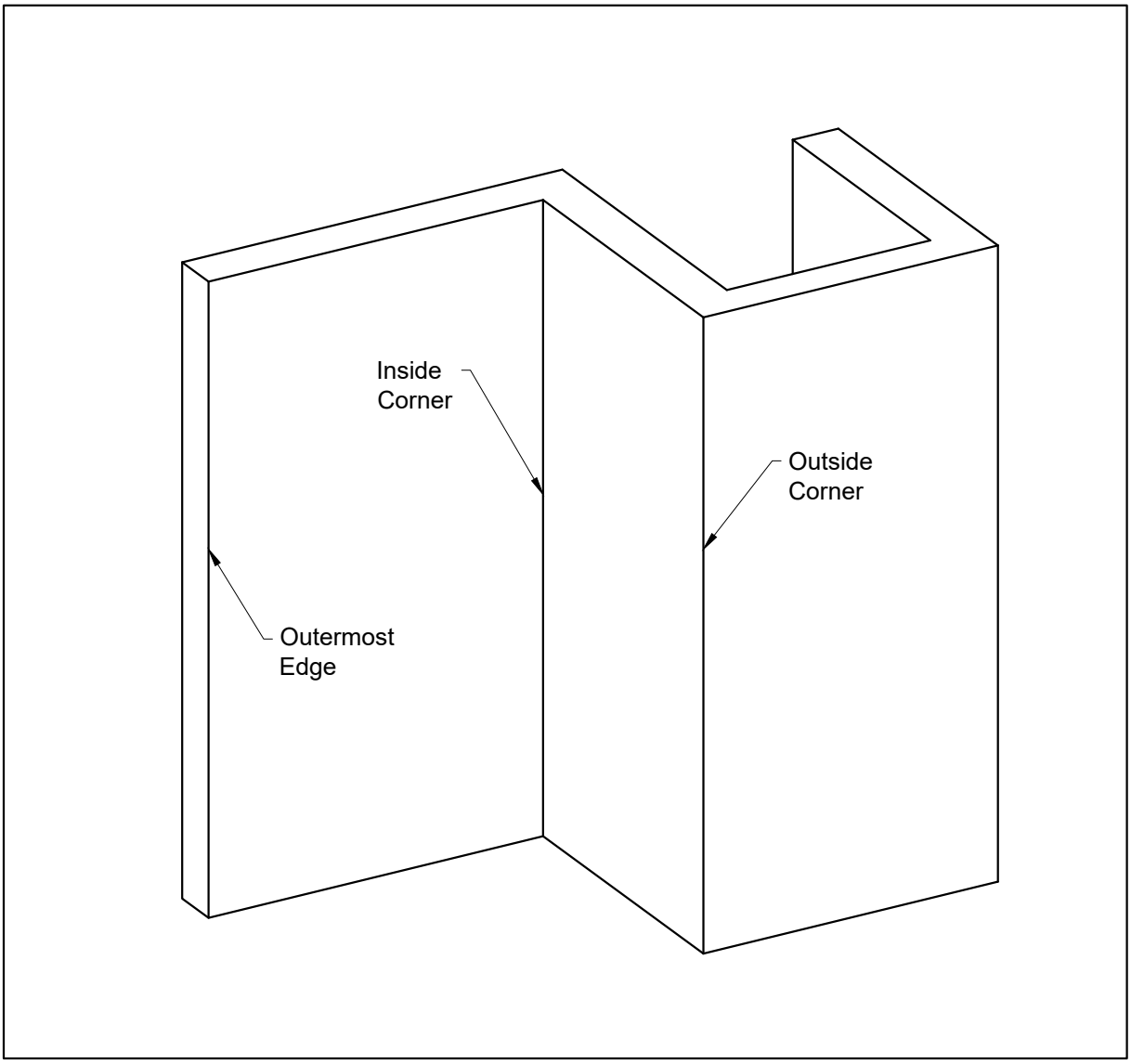

1.1 Measure and chalk lines for the furring strips according to the span data specified on ***Page 7***, as shown in the ***Diagram 1.1***

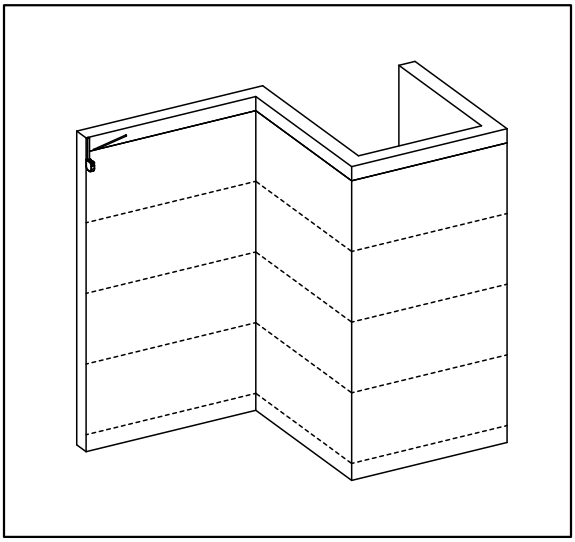

Diagram 1.1

Note:

1. **For this illustration, we are using wood furring strips. Please refer to** *Page 5* **for recommended screws when using aluminum furring strips.**

2. **A 12" span is required between furring strips for the vertical installation to keep siding boards from bowing as noted on** *Page 7*.

1.2 Attach the furring strips to the walls with screws every 16", as shown in the ***Diagram 1.2.***

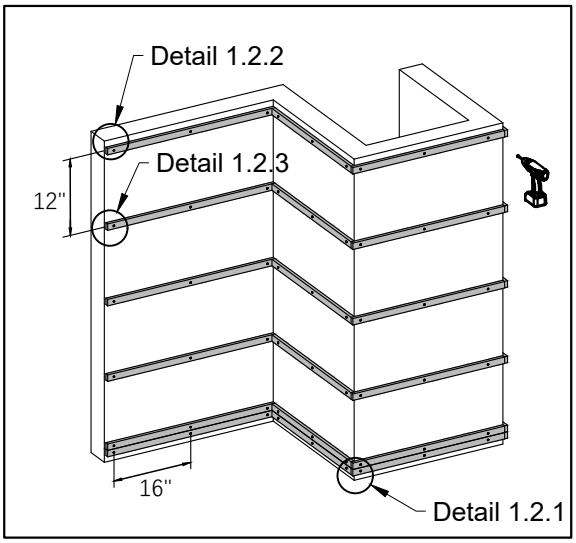

Diagram 1.2

Note:

1. **Leaving a minimum of 1" gap between the furring strip and floor, as shown in the** *Detail 1.2.1*

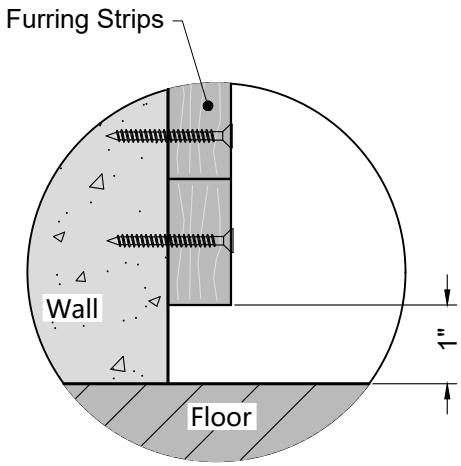

Detail 1.2.1

2. **Leaving a minimum of 3/8" gap between ceiling and the furring strip, as shown in** *Detail 1.2.2*

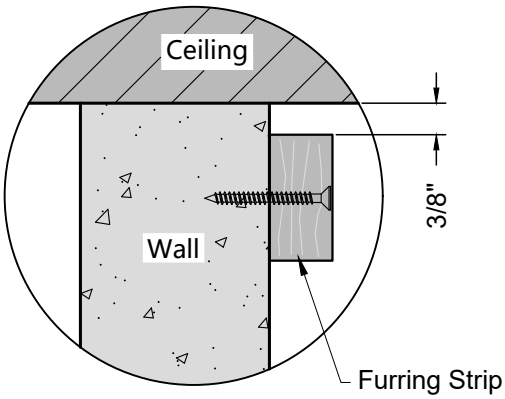

Detail 1.2.2

3. **For the outermost edge furring strips installation, please work according to** *Detail 1.2.3*

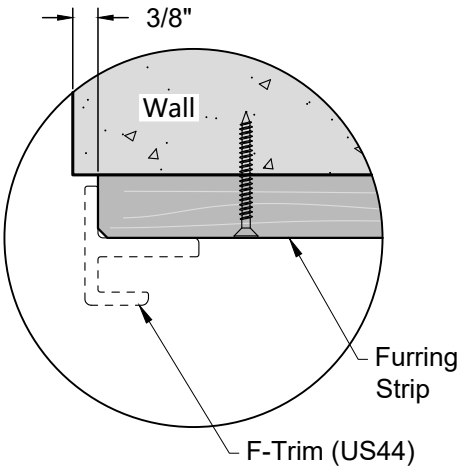

Detail 1.2.3

1.3 You must use an aluminum angle or equivalent at the bottom to support the siding boards when installing vertically, as shown in the ***Diagram 1.3*** and ***Detail 1.3***

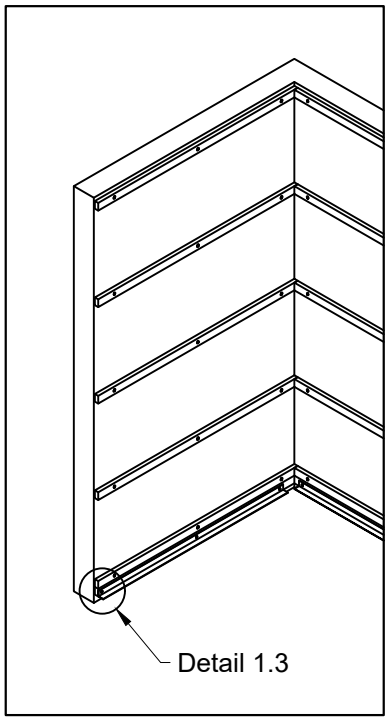

Diagram 1.3

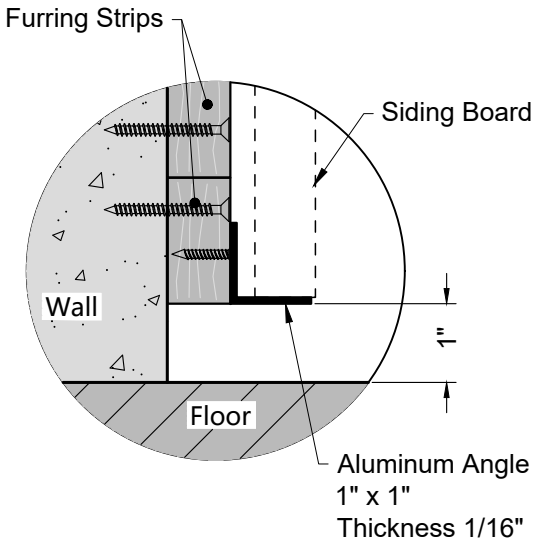

Detail 1.3

Step 2: Trim Installation

We recommend to start the siding installation from the Inside Corner or Outside Corner, as shown in the diagram below,

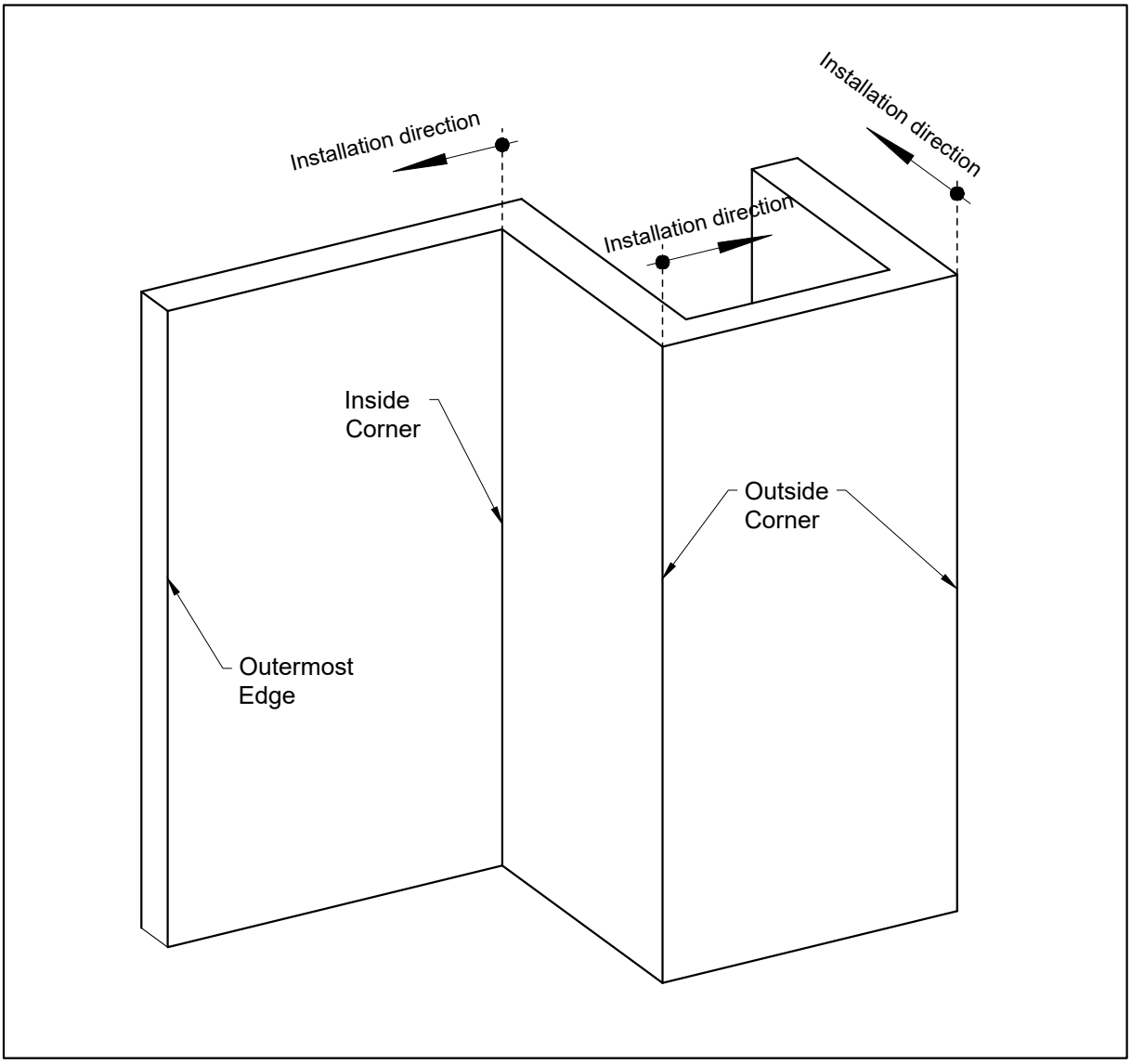

Note:

1. **For all trims, you must pre-drill the holes with a #8 countersink drill bit to allow it to expand and contract. Please review** *Page 2* **for further information.**

2. **Leave a minimum gap of 1" between the trim's bottom and the floor, as shown in the diagram on right.**

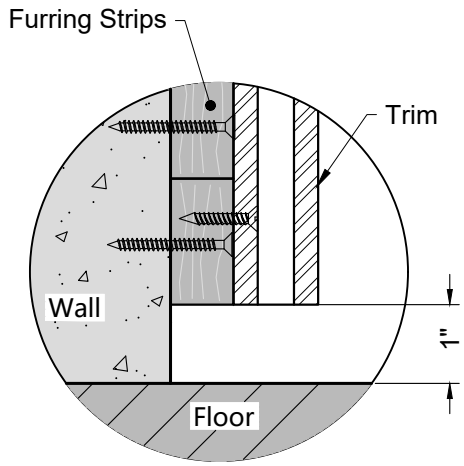

2.1 Secure the trim onto the furring strips with screws at the starting wall corner.

Diagram 2.1.1 illustrates the Inside Corner Trim (US105) installation on the inside corner.

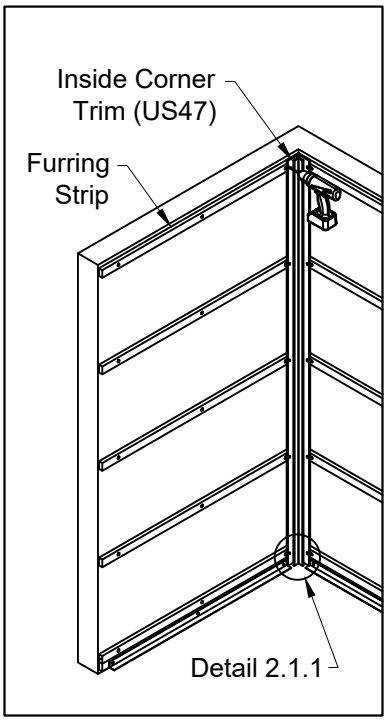

Diagram 2.1.1

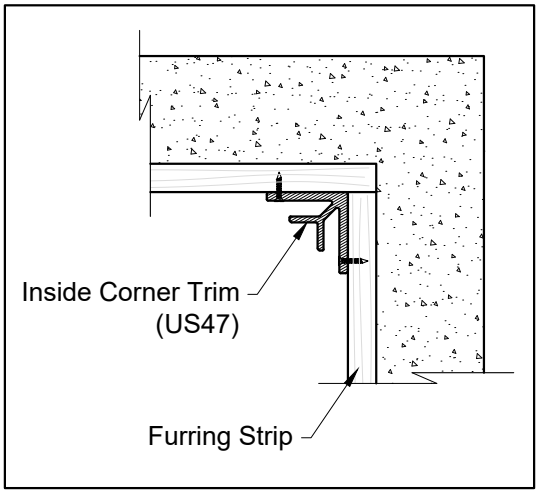

Detail 2.1.1

Diagram 2.1.2 illustrates the Outside Corner Trim (US106) installation on the outside corner.

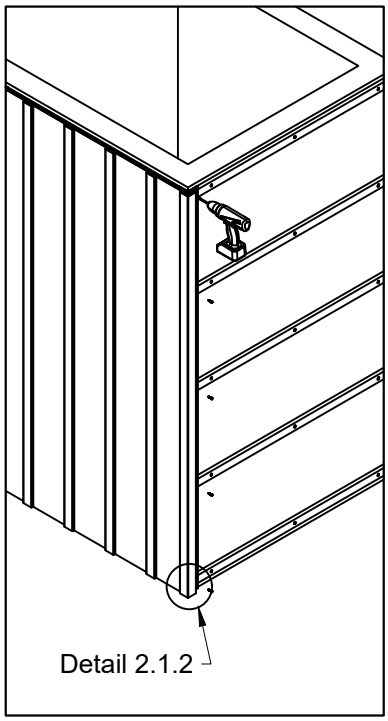

Diagram 2.1.2

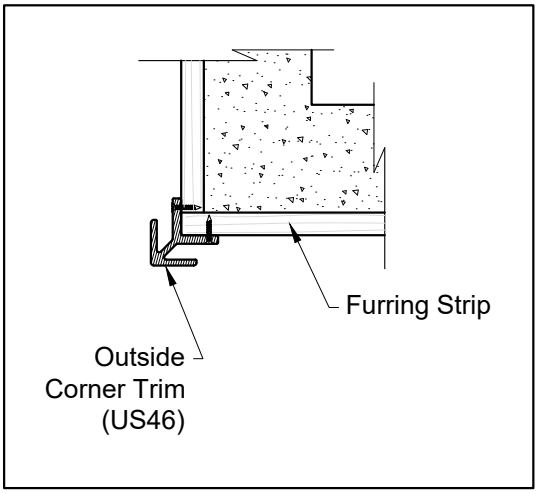

Detail 2.1.2

Step 3: First Siding Board installation

3.1 Place the first siding board against the trim and face screwing it onto the furring strips with screws.

Note:
Rip the first siding board to remove the raised slat part, as shown in the diagram below.

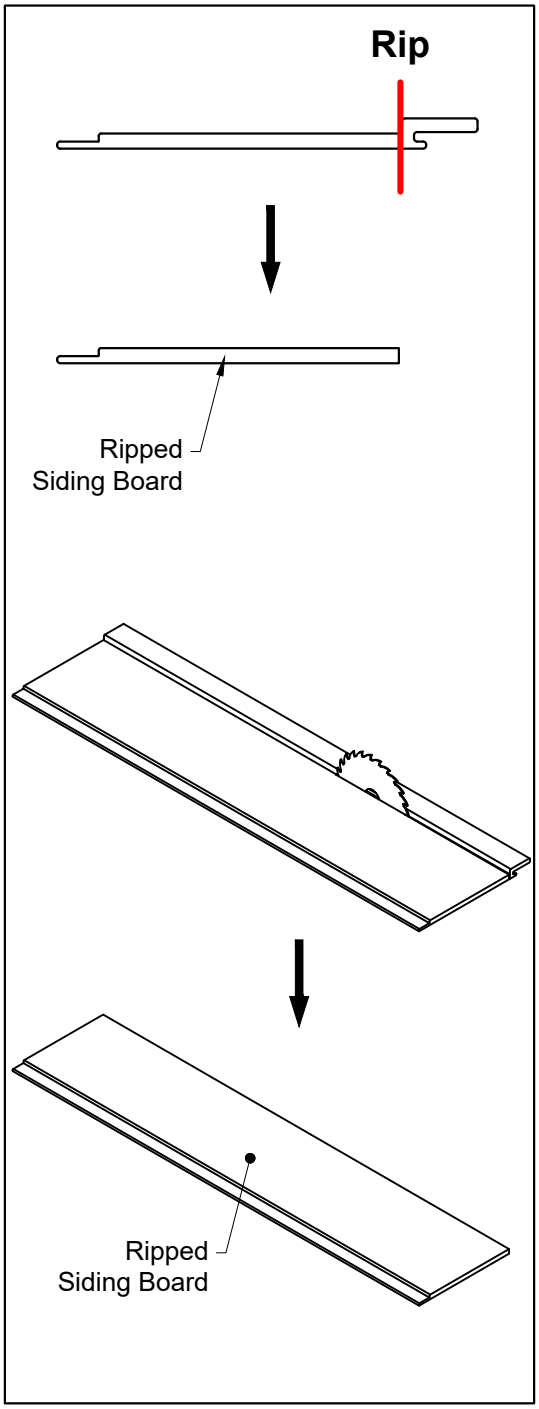

Diagram 3.1.1 illustrates the first siding board installation at the inside corner.

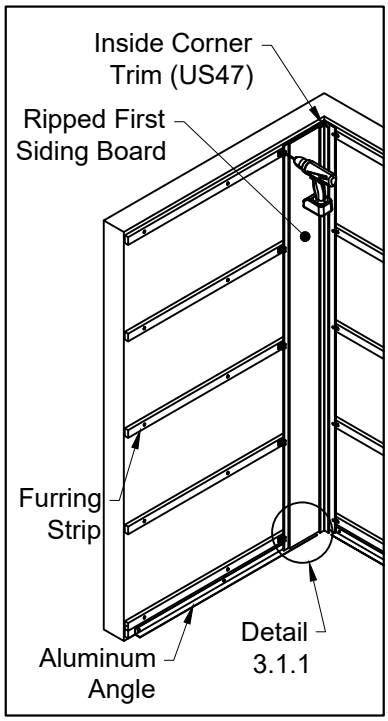

Diagram 3.1.1

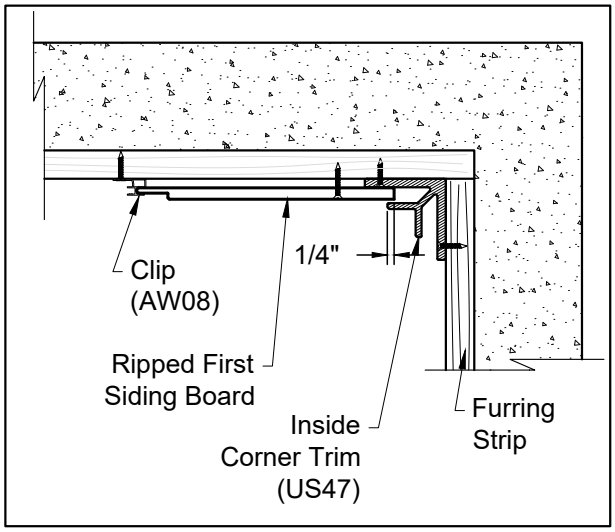

Detail 3.1.1

Diagram 3.1.2 illustrates the first siding board installation at the outside corner.

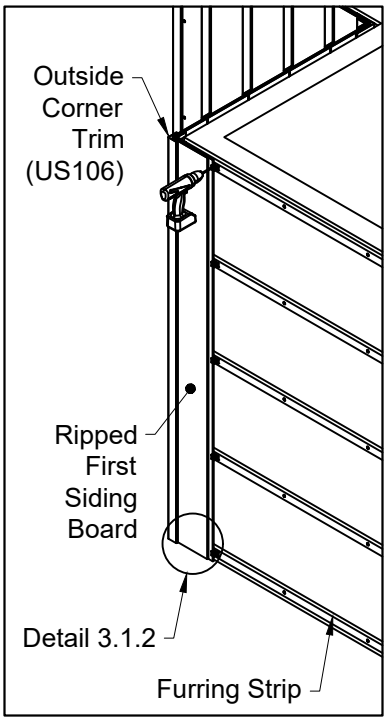

Diagram 3.1.2

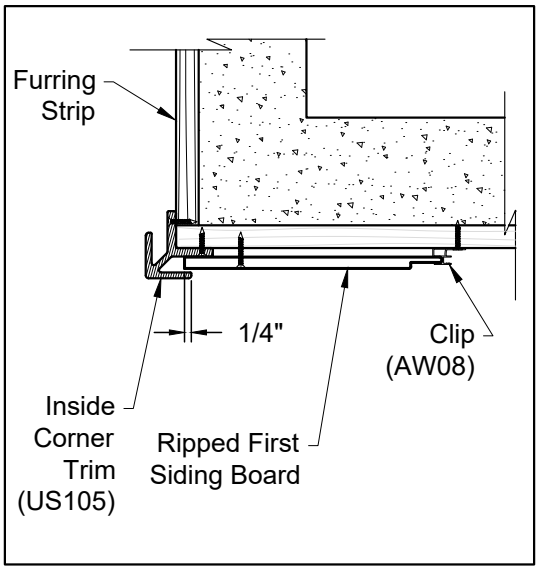

Detail 3.1.2

Step 4: Install the remaining boards

4.1 Place the next siding board over the last installed Clip (AW08), and secure it onto the furring strip with the clip AW08.

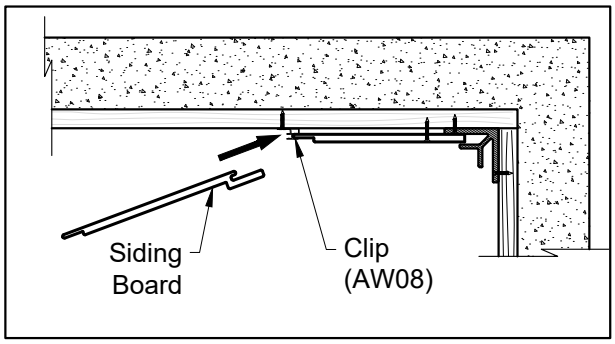

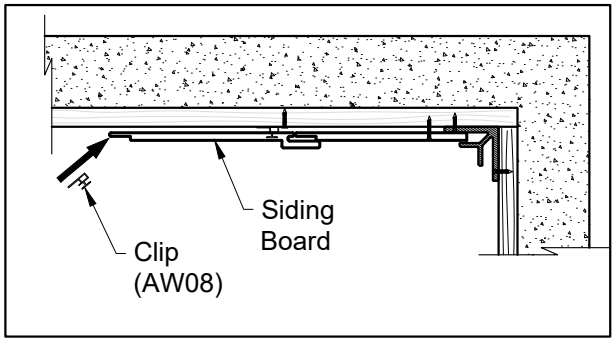

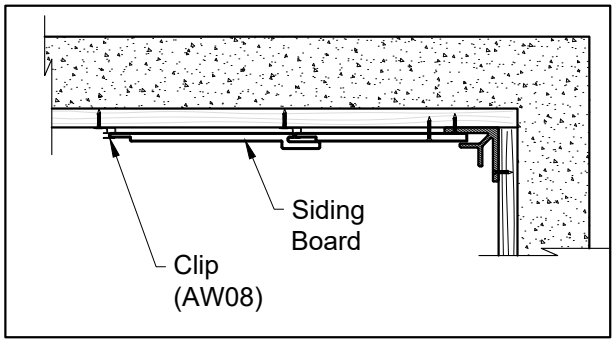

Step 5: Install the last board

When you are in the last board, install the last siding board according to the steps following,

1. Measure the space,
2. Rip the siding board accroding to the measurement
3. Put it over the last installed clip in place
4. Place the trim against the last siding board
5. Face screwing the last siding board with the trim onto the furring strip.

5.1 Below diagrams illustrate the last siding board installation at the outermost edge.

1. Measure the space

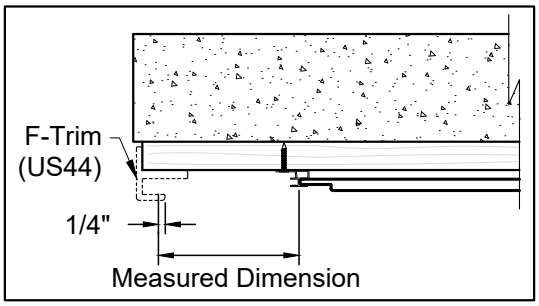

2.Rip the siding board according to the measurement

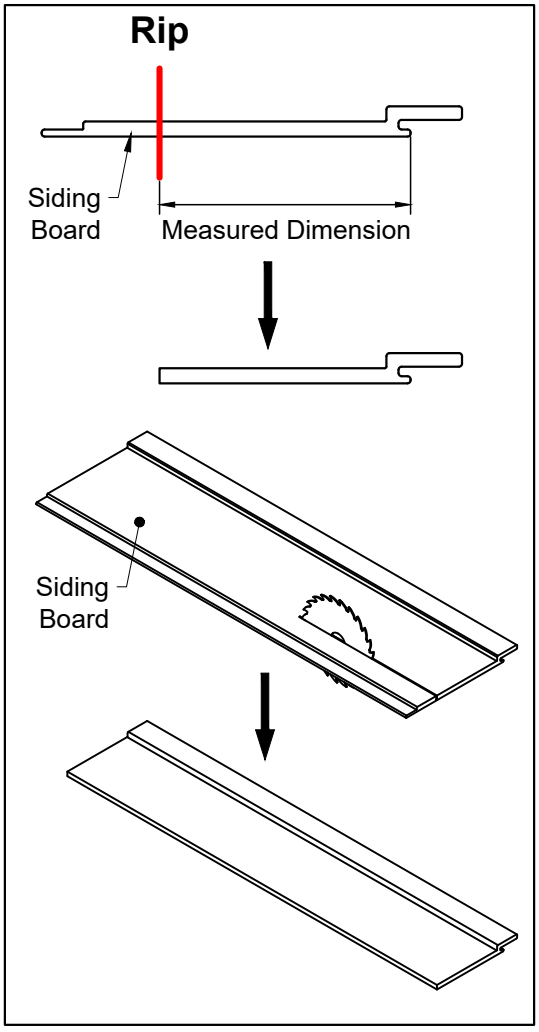

3. Put the ripped siding board over the last installed clip in place

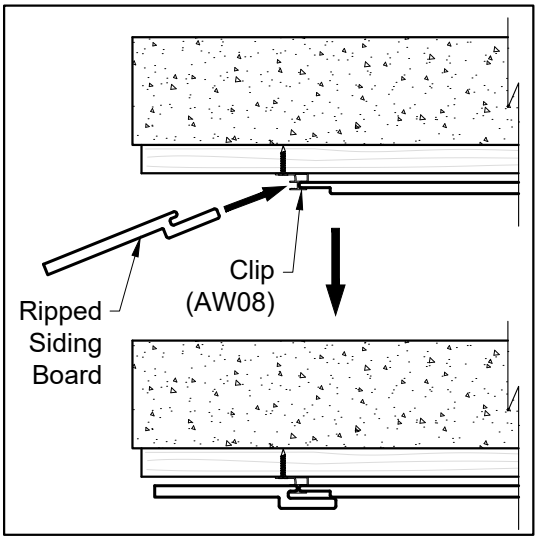

4. Place the trim against the last siding board

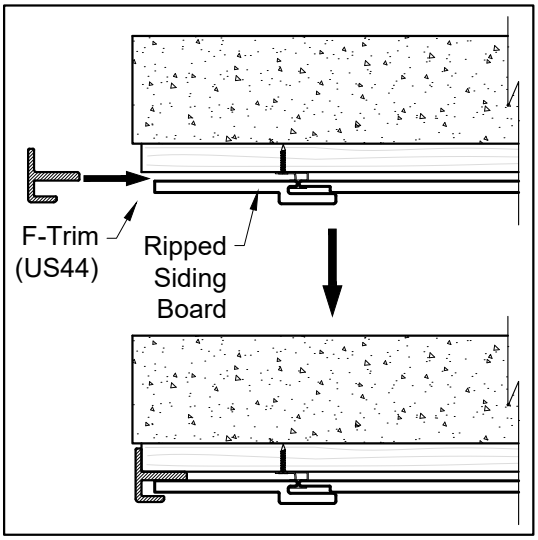

5. Face screwing the last sidng board with the trim onto the furring strip

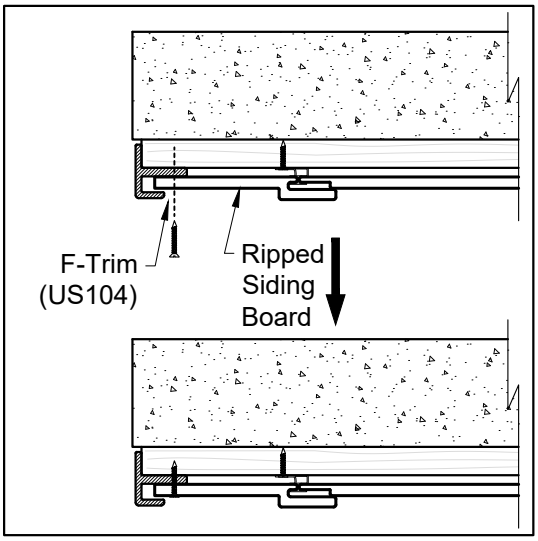

6. Diagram 5.1.6 illustrates the finish looking after completion the siding board installation.

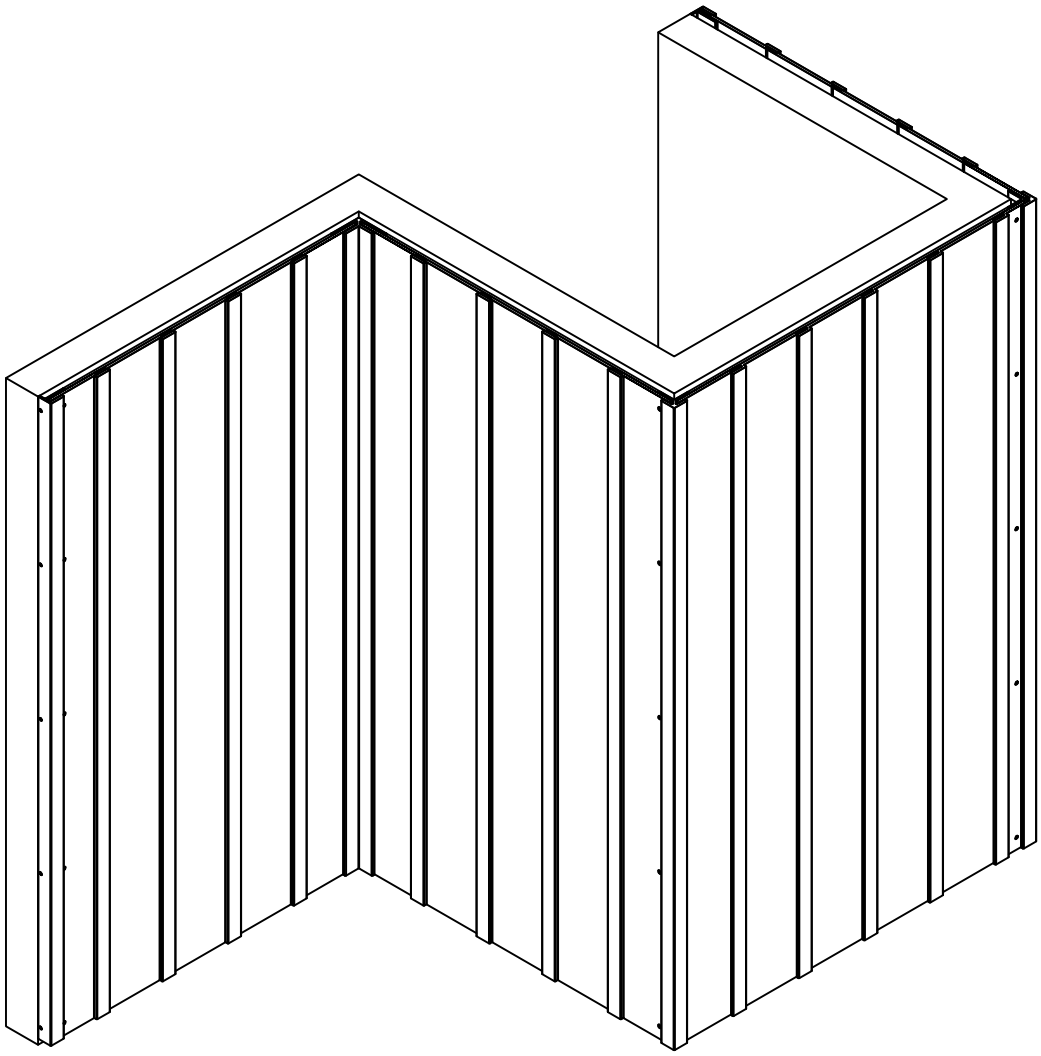

Diagram 5.1.6

A : Finish the Top

See option 1: Cap with the compoiste trim
option 2: Cap with metal flashing

A.1 Option 1: Cap with the compoiste trim

1. Rip the F-Trim (US73), as shown in the ***Diagram A.1.1***

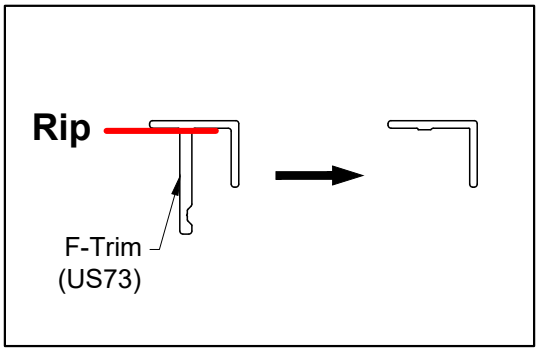

Diagram A.1.1

2. Put the ripped F-Trim (US73) in place, fix it onto the furring strip with screws, as shown in the ***Diagram A.1.2***

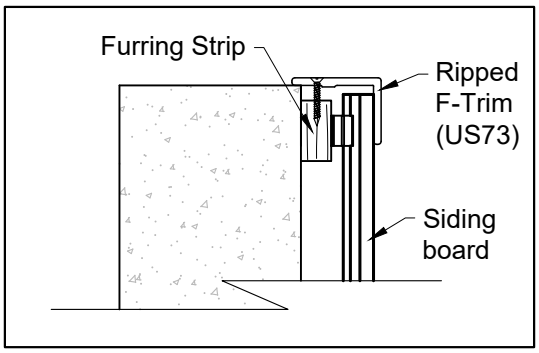

Diagram A.1.2

3. Seal with silicone sealant, as shown in the Diagram A.1.3

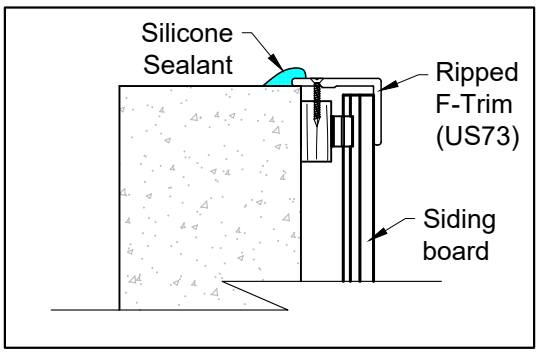

Diagram A.1.3

A.2 Option 2: Cap with the metal flashing

1. Put the metal flashing in place and secure it onto the furring strip with screws, as shown in the ***Diagram A.2.1***

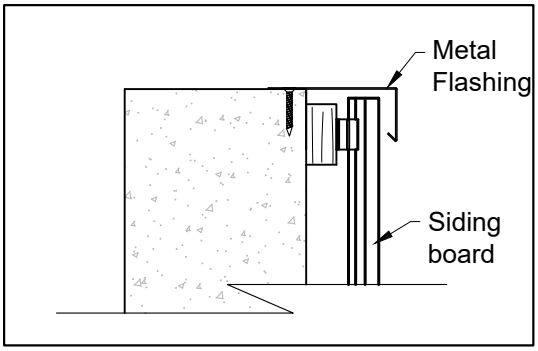

Diagram A.2.1

2. Seal with silicone sealant, as shown in the ***Diagram A.2.2***

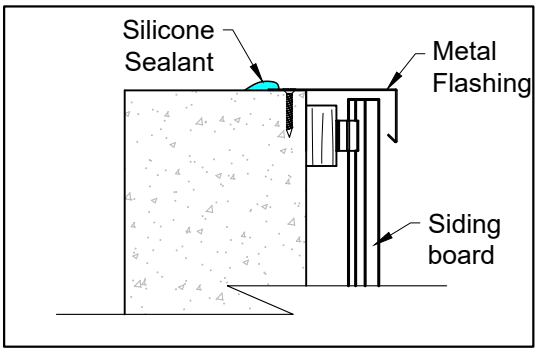

Diagram A.2.2

B : Butt Joint Installation
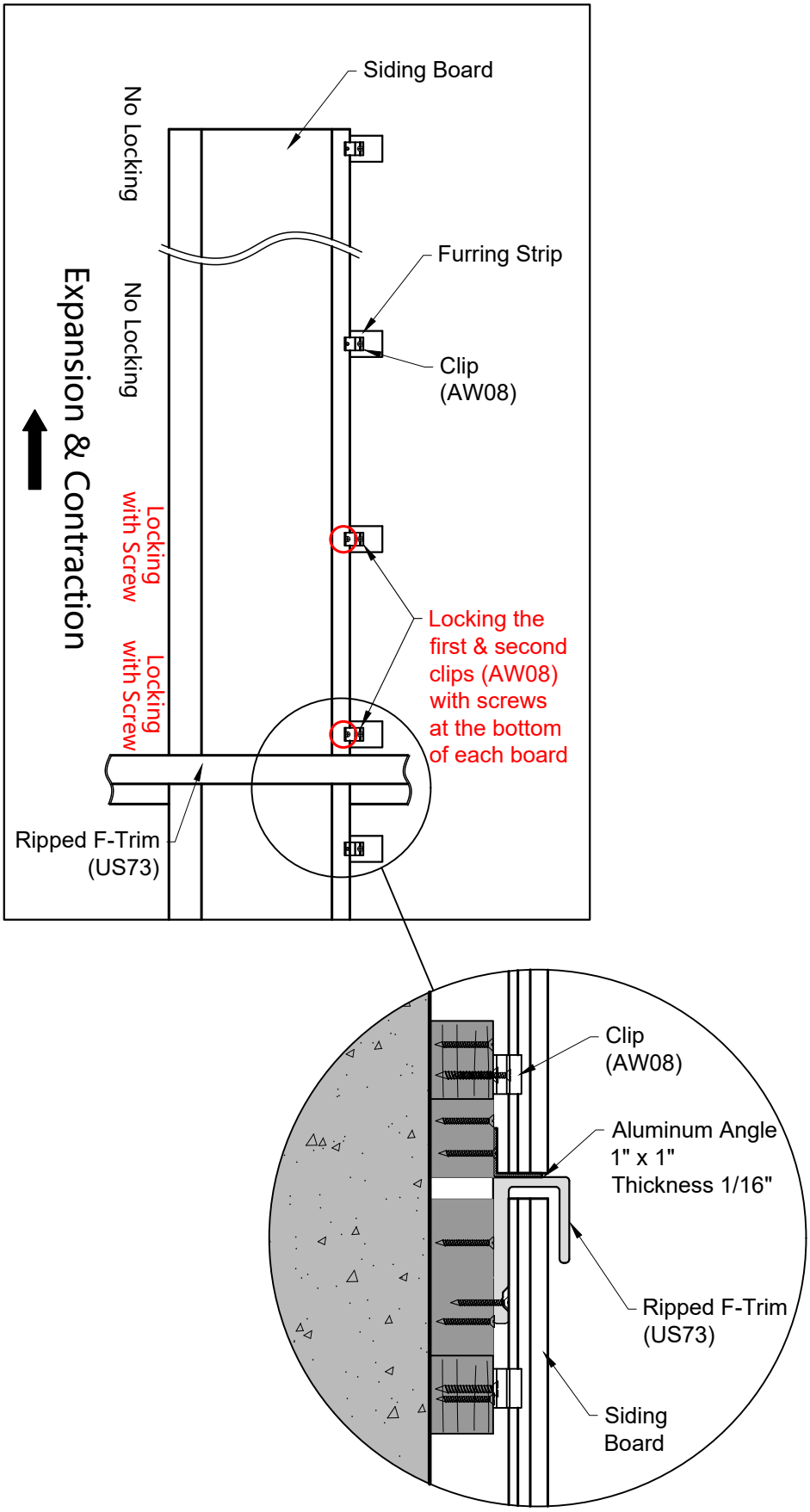
Use the F-trim (US73) and aluminum angle for butt joint installation. It is also required to lock the first and second Clip (AW08) starting from the bottom of each board. Please refer to Page Locking the Siding Board.