XYZ-Axis Electrically Conductive Tape DCN30

Aug. 2012

Product Structure



Product Description

3M™ XYZ-Axis Electrically Conductive Tape DCN30 is an isotropically electrical conductive tape. It consists of conductive nonwoven coated with conductive acrylic pressure sensitive adhesive. The results in a double-sided tape providing both good adhesion and very good electrical conductivity. The conductive nonwoven in Tape DCN30 also provides improved handling characteristics. Tape DCN30 is conductive through the thickness (Z-axis) and in the plane of the adhesive (X, Y planes).

Application Ideas

Tape DCN30 is ideal for conductive connection of ESD grounding, EMI shields and EMI gasket attachment to electronic and electrical devices. It may be used as grounding tape for electrical modules, or combined with many types of foil laminate shields to provide a customized shielding solution, and may also be used to attach conductive fabric/foam core EMI gaskets to electronic cabinetry. Tape DCN30 may be applied in strips or die cut to specific shapes and sizes to meet the design.

3M™ XYZ-Axis Electrically Conductive Tape DCN30

Construction

Items	Descriptions
Adhesive Type	Conductive acrylic based pressure sensitive adhesive
Carrier Type	Conductive nonwoven
Tape Thickness	1.2mils (30 µm)
Liner Color, Type, Print	PET liner
Liner Thickness	2mil (50 µm)

Agency Approvals & Self Certifications

RoHS 2002/95/EC

RoHS Compliant 2002/95/EC" means that the product or part ("Product") does not contain any of the substances in excess
of the maximum concentration values in EU Directive 2002/95/EC, as amended by Commission Decision 2002/618/EC,
unless the substance is in an application that is exempt under RoHS. This information represents 3M's knowledge and
belief, which may be based in whole or in part on information provided by third party suppliers to 3M.

Typical Physical Properties and Performance Characteristics

Note : The following technical information and data should be considered representative or typical only and should not be used for specification purposes.

Properties	Typical Values
Adhesion-180 degree peel strength (Modified ASTM D3330; 180 degree, 2 mil PET as backing)	Oz/in (N/100mm)
- 20 minutes @RT	58 (50)
- 24 hours @RT	64 (55)
- 72 hours @RT	75 (65)

Operative Temperature Range*:

Long Term (days, weeks)	85°C (185 F)
Short Term (minutes, hours)	250 F (121°C)

* Tape DCN40 is not recommended for uncertain high or low temperature excursions where the application performance might be compromised. The user is recommended to conduct application evaluation to determine the fit-for-purpose of Tape DCN40 in their design.

3M™ XYZ-Axis Electrically Conductive Tape DCN40

Electrical Properties

Electrical Resistance

Surface resistance [1]	< 0.06Ω/□
Resistance through adhesive [2]	< 0.01Ω/inch^2

Electrical Resistance Test Methods

1. Surface Electrical Resistance Test:

MIL-G-83528 surface Probe
Surface resistance of a material, SR Unit: Ω/□

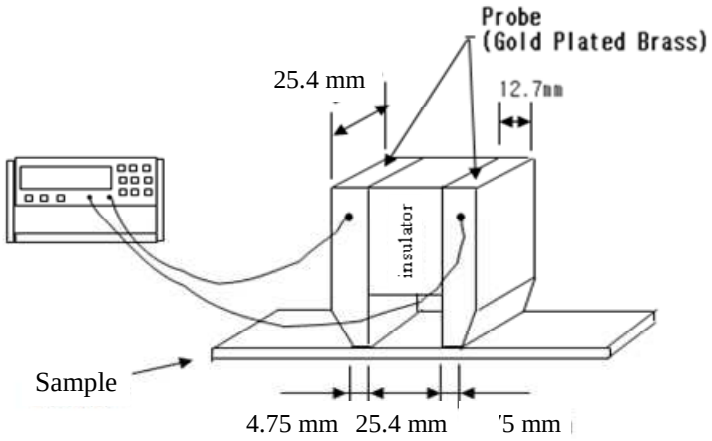

2. Contact Electrical Resistance Test:

MIL-STD-202 Method 307 maintained at 5 psi (3.4N/cm^2) measured on 1 square inch surface area, CR Unit : Ω/inch^2

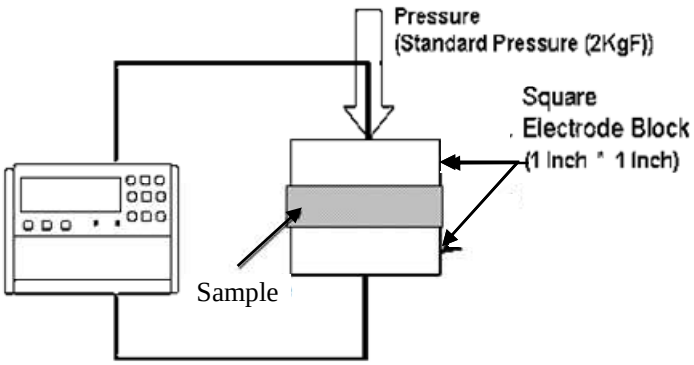

3M™ XYZ-Axis Electrically Conductive Tape DCN30

Application Techniques

Bond strength depends on the amount of adhesive-to-surface contact developed. Firm application pressure helps develop better adhesive contact sooner and improves bond strength as well as electrical conductivity. Pressure must be applied to the bond area after assembly, to wet the substrates with 3M™ XYZ-Axis Electrically Conductive Tape DCN30; and to engage the conductive nonwoven with the substrates to make electrical connection. Mechanical pressure (roller, metal bar) or finger pressure at 15 psi (0.10 Mpa) or greater is suggested. Heat may be applied simultaneously to improve wetting, final bond strength and electrical conductivity.
To obtain optimum adhesion, the bonding surfaces must be clean, dry and well unified. Some typical surface cleaning solvents are isopropyl alcohol or heptanes.

Note: Carefully read and follow the manufacturer's precautions and directions for use when working with solvents. Ideal tape application temperature range is 16°C to 38°C (61°F to 100°F). Tape application below 10°C (50°F) is not recommended because the adhesive will be too firm to wet the substrates, resulting in low adhesion and poor electrical conductivity. Once properly applied, low temperature holding power is generally satisfactory.

Certification/ Recognition

MSDS: 3M will prepare MSDS for the products which are subject to the MSDS requirements of the Occupational Safety and Health Administration's Hazard Communication Standard, 29 C.F.R.
TSCA: The product is defined as articles under the Toxic Substances Control Act and therefore, is exempt from inventory listing requirements.

Important Notice

3M MAKES NO WARRANTIES, EXPRESS OR IMPLIED, INCLUDING, BUT NOT LIMITED TO, ANY IMPLIED WARRANTY OF MERCHANTABILITY OR FITNESS FOR A PARTICULAR PURPOSE. User is responsible for determining whether the 3M product is fit for a particular purpose and suitable for user's method of application. Please remember that many factors can affect the use and performance of a 3M product in a particular application. The materials to be bonded with the product, the surface preparation of those materials, the product selected for use, the conditions in which the product is used, and the time and environmental conditions in which the product is expected to perform are among the many factors that can affect the use and performance of a 3M product. Given the variety of factors that can affect the use and performance of a 3M product, some of which are uniquely within the user's knowledge and control, it is essential that the user evaluate the 3M product to determine whether it is fit for a particular purpose and suitable for the user's method of application.

Limitation of Remedies and Liability

If the 3M product is proved to be defective, the exclusive remedy, at 3M's option, shall be to refund the purchase price of or to repair or replace the defective 3M product. 3M shall not otherwise be liable for loss or damages, whether direct, indirect, special, incidental, or consequential, regardless of the legal theory asserted, including, but not limited to, contract, negligence, warranty, or strict liability.

3M is a trademark of 3M Company

3M

Electronic Markets Materials Division
No.8 Xing Yi Road, Shanghai
200336 P.R.C.

© 3M 2012
All Rights Reserved