TR-25
Buchholz Relay



Description

TR-25 buchholz relay is a safety device mounted on oil-filled power transformers, which can monitor the accumulation of explosive gases caused by dielectric failures such as leaking currents, arcs, flashovers etc. When a serious internal fault occurs in the transformer (such as turn-to-turn fault, TTF), the oil flow surge generated at this time is used to trigger the contact connection and quickly lock the main circuit of the transformer, thus protecting the transformer.



TR-25
Buchholz Relay

Features

- Excellent UV shielding using anti-UV laminated glass with over 99% UV protection. This ensures even if the observation window cover is left open for prolonged period, the transformer oil will not be affected. Laminated glass panel also ensures safety and protection.
- Probe equipped for partial trigger function for testing and calibration. When half-pressed the probe will trigger warning signal, while fully-pressed the probe will trigger warning and locking signal.
- High-strength full-metal movement structure ensuring stability at flow rate as high as 3.8 m/s.
- Main shaft of the bearing supported by imported precision bearing, eliminating wear and tear in float shaft.
- The oil flow baffle can automatically reset by gravity, eliminating the potential loss of the spring elasticity. IP67 protection class, no dew condensation inside.
- High performance magnets maintaining magnetism
- even at 200°C .

Technical Parameters		
Main Components Material	Casing	Aluminum Alloy
	Window Panel	Anti-UV Laminated Glass
Working Conditions	Oil Temperature	-40°C～ +100°C
	Ambient Temperature	-40°C～ +70°C
Trigger Characteristics	Flow Rate Locking Signal Setting Range	0.7-3.8 m/s, precision ±10%
	Two Pairs of Magnetic Switch Contact Reads for Each Signal	Slight Fault – Floater - Warning
		Severe Fault - Flap- Locking
Installation Environment	If installed outdoor, need protective casing	
	Adopted for High Altitude Environments	
Cable Connection	M20x1.5, One at each side of the connector box	
Electrical Characteristics	220V AC 3A: Power Factor < 0.6 220V DC 3A: Time Coefficient τ ⩽ 0.005 s	
Withstanding Voltage	Between Reed Contacts, and Contacts to Earth: 2.5kV DC/AC 1min Normally Open Reed Contacts: 2.0kV DC/AC 1min	
Number of Contacts	Maximum 4 pairs	
Protection Class	IP67	

Dimensions

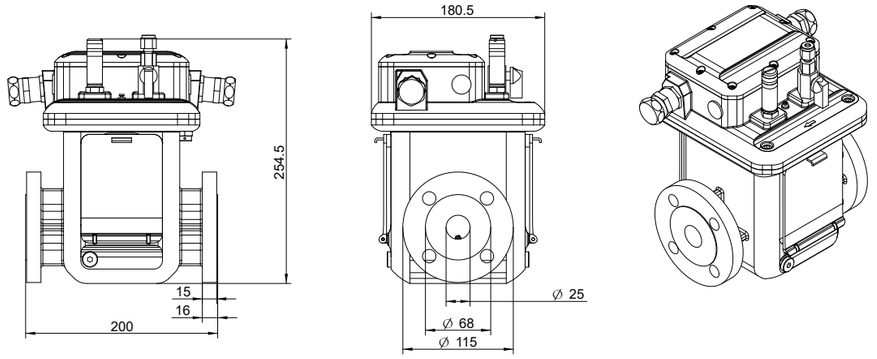

Fig 1. Overall Dimensions

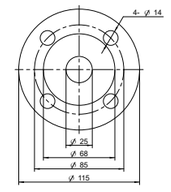

Fig 2. Flange Dimensions