Lanso Konly (Shanghai) Instruments Co., Ltd.
Tel: (86) 021 64897236
Fax: (86) 021 54421043
Website: www.lansoinstruments.com

A05-0450EN Rev00

LANSO®

TOL-250R

Digital Transformer Oil Level Gauge

Instruction Manual



Lanso Konly (Shanghai) Instruments Co., Ltd.

Table of Contents

1. Safety Warnings ····· 1
- 1.1. General Safety Specifications ····· 1
- 1.2. High Voltage Operation Safety Warnings ····· 2
- 1.3. Installation and Commissioning Safety ····· 2

2. Product Introduction ····· 2
3. Working Principle ····· 3
4. Main Technical Parameters ····· 3
5. Model Designation ····· 4
6. Installation and Commissioning ····· 4
- 6.1. Outline Dimensions and Installation Drawings ····· 4
- 6.2. Pre-installation Inspection ····· 7
- 6.3. Installation Procedures ····· 7
- 6.4. Wiring Specifications ····· 7
- 6.5. Equipment Commissioning ····· 7

7. Communication Protocol ····· 7
8. Operation Instructions ····· 10
9. Transportation and Storage ····· 10
- 9.1. Transportation Requirements ····· 10
- 9.2. Storage Requirements ····· 10

10. Disclaimer ····· 11

TOL-250R
Digital Transformer Oil Level Gauge



1.Safety Warnings

1.1.General Safety Specifications

1. This product is a precision instrument supporting high-voltage transformers. It shall only be installed and operated by professionals who hold high-voltage electrician operation qualifications and are familiar with power equipment operation and maintenance specifications.

2. Before installation, commissioning and maintenance of the equipment, you must read this manual in full, and be fully familiar with the product performance, parameters and operation procedures.

3. Unauthorized disassembly, modification and alteration of the equipment structure and internal wiring are strictly prohibited. The manufacturer shall not bear any responsibility for equipment failures and safety accidents caused by unauthorized operations.

4. The equipment is a precision measuring device. Violent impact, falling, squeezing and water immersion are strictly prohibited. Illegal use in harsh environments with strong corrosion, strong vibration, over-temperature and over-humidity shall be avoided.

1.2.High Voltage Operation Safety Warnings

1. The transformer body and its matched instruments operate in a high-voltage environment. Before any work, the equipment power supply must be cut off, pressure relieved, and warning tags hung. Strictly follow the power safety work procedure: power cut-off, voltage test, earthing, tag hanging and barrier installation.
2. Installation, disassembly, wiring and maintenance are strictly prohibited while the equipment is energized or pressurized, to prevent accidents such as high-voltage electric shock and oil-gas ejection injury.
3. Insulating protective gear must be worn for on-site operations, and national and power industry safety regulations for high-voltage work shall be complied with.

1.3.Installation and Commissioning Safety

1. Before installation, verify the product model, technical parameters and applicable scenarios, confirm that they match the parameters of the transformer equipment, and wrong installation and mixed use are prohibited.
2. Pipes and interfaces shall be installed with tight sealing, without hidden dangers of air leakage and oil leakage. Tightness test must be carried out after the installation is completed.
3. Wiring operations shall be carried out in strict accordance with the wiring diagram, distinguish between strong current, weak current and communication lines, and wrong connection, virtual connection and short connection are prohibited.

2.Product Introduction

The transformer oil level gauge is a dedicated device specially designed for measuring the oil level of power transformers. It usually consists of floating elements, transmission elements, indicating elements, alarm elements, sensors and other components, and is used for real-time monitoring of the oil level in the conservator. When the oil level rises or drops to a specified position, the oil level value can be displayed on the local dashboard or remote monitoring system, assisting operators to keep track of the oil level status. It will trigger alarm signals when the oil level is too high or too low, providing reliable guarantee for the normal operation of the transformer.

As a critical transformer monitoring device, the transformer oil level gauge plays a vital role in the entire power system. Meanwhile, this product features outstanding advantages including high-precision measurement, safety and reliability, as well as easy installation and maintenance.

3.Working Principle

The transformer digital oil level gauge uses a float that floats in the transformer oil to generate buoyancy. This buoyancy acts on a lever and is converted into pointer rotation through a gear-driven amplification mechanism. This is the core technology. The key mechanism is that when the buoyancy on the float changes, it causes the lever to swing and transmits torque to the gears. The gears amplify this torque at a certain speed ratio. The amplified gear assembly then transmits the rotation to the pointer through magnetic coupling. In this way, the movement of the float with the oil level is converted into the rotational movement of the pointer. The pointer's movement is displayed on the dial to show the real-time oil level. The design principle of this device is based on the fact that as the oil level inside the oil reservoir rises or falls, the buoyancy on the float always changes in sync with the oil level. These changes are continuously and synchronously transmitted through the lever, gear drive, and magnetic coupling. In this way, the transformer digital oil level gauge can ensure the real-time, accurate, and stable reading of the oil level inside the oil reservoir.

4.Main Technical Parameters

Table 1 TOL-250R Parameter List

Parameter Category	Parameter Item	Technical Index
Environmental Parameters	Operating ambient temperature	-40°C～ +70°C
	Storage temperature	-50°C～ +90°C
	Relative humidity	≤95%RH (no condensation)
	Protection grade	IP67
Performance Parameters	Measurement accuracy	±2.5% F.S.
	Alarm and interlock setting value	Up to two switches each for high and low oil levels, each switch selectable as normally open or normally closed
Electrical Parameters	Working power supply (intelligent version)	DC24V / AC220V (optional)
	Switch contact capacity	AC220V 5A / DC220V 0.3A
	Communication mode	Modbus-RTU (standard) 4-20mA(optional)
Mechanical Parameters	Seismic performance	Complies with the seismic standard for power equipment

5.Model Designation

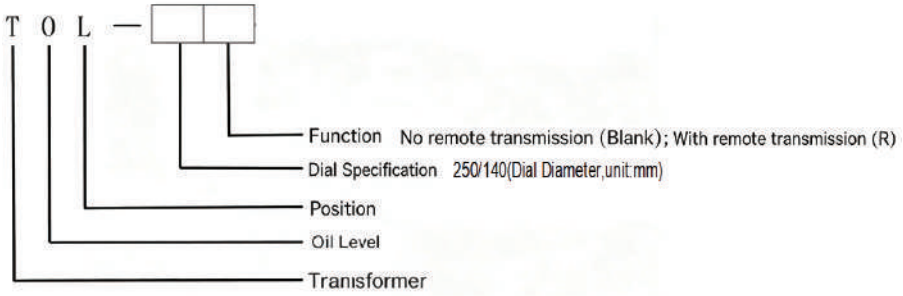

6.Installation and Commissioning

6.1.Outline Dimensions and Installation Drawings

Outline Dimension Parameters

For the standard outline dimensions, mounting cutout dimensions and interface dimensions of this product series, please refer to the attached drawings at the end of the document. For specially customized dimensions, the customer's drawings shall prevail.

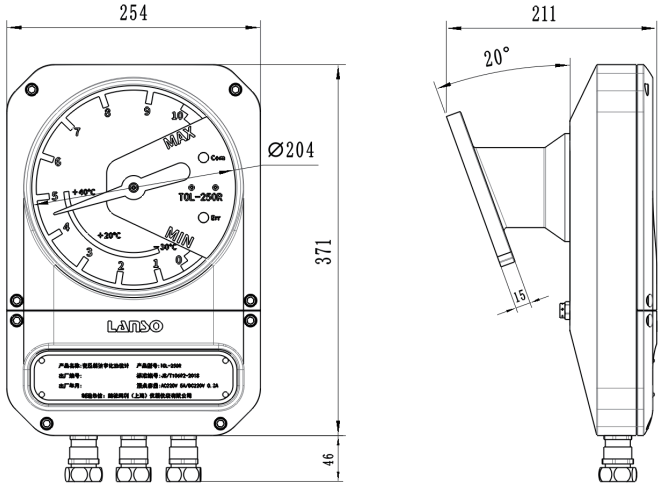

Attached Drawing 1: Overall Outline Dimension Drawing of the Product

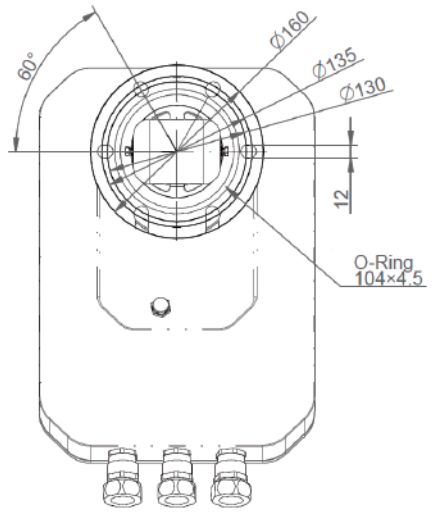

Attached Drawing 2: Schematic Diagram of Equipment Mounting Cutout

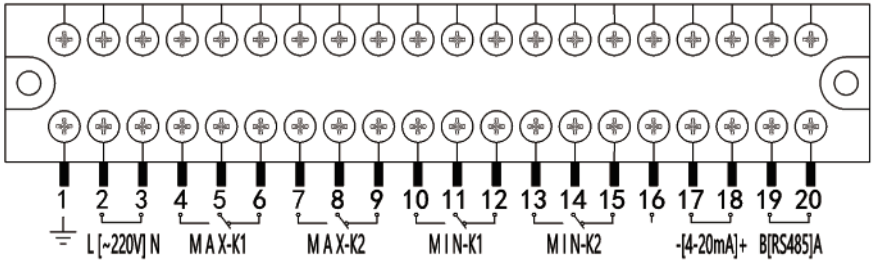

Attached Drawing 3: Schematic Diagram of Electrical Wiring Terminals

Table 2 Electrical

Wiring Diagram Connector Number	Notes	Remarks
1	Ground Wire	
2,3	Power Supply	2→Live Wire; 3→Neutral wire
4,5,6	High Oil Level K1 Alarm Port	4,5→Normal Open; 5,6→Normal Close
7,8,9	High Oil Level K2 Alarm Port (Optional)	7,8→Normal Open; 8,9→Normal Close

Wiring Diagram Connector Number	Notes	Remarks
10,11,12	Low Oil Level K1 Alarm Port	10,11→Normal Open; 11,12→Normal Close
13,14,15	Low Oil Level K2 Alarm Port (Optional)	13,14→Normal Open; 14,15→Normal Close
16	/	
17,18	4-20mA Analog Signal Output Port (Optional)	17→I-,18→I+
19,20	RS485 Digital Signal Output Port	19-B,20-A

Wiring Terminals*Note: In the table, “NO/NC” indicates the switch contact status when the normal oil level has not reached the “highest/lowest” position.

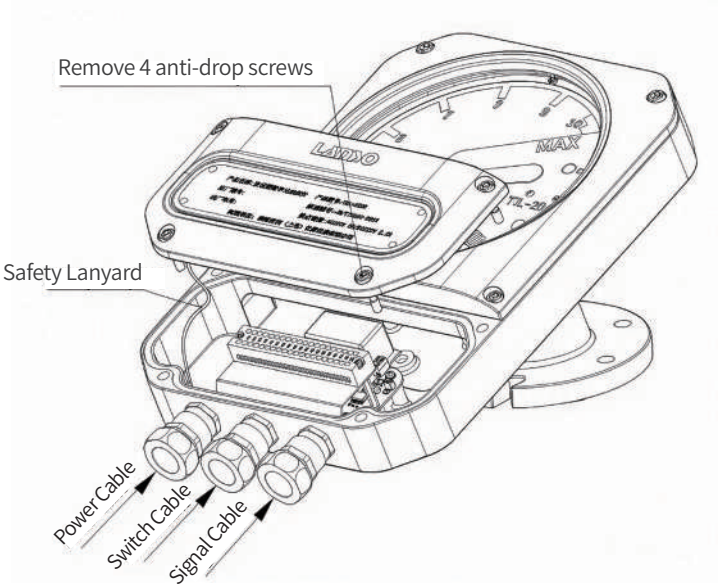

Attached Drawing 4: Schematic Diagram of Interface Dimensions

6.2.Pre-installation Inspection

1. Check that the product appearance is free of damage, the shell has no cracks, and the glass/display screen is not broken;
2. Verify that the sealing interface is intact, free of scratches and deformation, and all accessories are complete;
3. Confirm that the product model, parameters and set values are consistent with the equipment requirements;
4. Ensure the mounting base surface is flat, free of rust and debris, and the equipment is in a power-off and pressure-relief state.

6.3.Installation Procedures

1. Place the sealing gasket accurately at the mounting interface to ensure tight fit;
2. Align the mounting interface, manually tighten the threads first, then fasten evenly with a tool. It is forbidden to apply excessive force on one side to avoid thread slipping and sealing deformation;
3. After installation, check the verticality and firmness of the equipment to ensure no looseness or skew;
4. Conduct a tightness test on the pipeline interface to confirm no leakage.

6.4.Wiring Specifications

1. Wire strictly in accordance with the wiring schematic diagram, and distinguish power terminals, switch signal terminals and communication terminals;
2. Ensure the crimping of cables is firm, the insulating layer is intact, no copper wire is exposed, and the wiring is neat and standardized;
3. The communication line shall use shielded twisted pair, which is grounded at one end to reduce electromagnetic interference;
4. Recheck the wiring after completion to eliminate wrong connection, missing connection and virtual connection.

6.5.Equipment Commissioning

1. Recheck the wiring and installation tightness before power-on, and power on only after confirming no errors;
2. After power-on, observe the status of the equipment display and indicator lights. The equipment shall start normally without error reports;
3. Verify the accuracy of the measured values to confirm the values are stable and free of drift;Simulate the over-limit working condition to test that the alarm and interlock signal outputs are normal;
4. For intelligent equipment, debug the communication parameters to ensure normal communication with the background monitoring system and normal data upload;
5. Record the commissioning data after debugging, and keep the acceptance records.

7.Communication Protocol

1. Communication Protocol: Standard Modbus-RTU industrial communication protocol;
2. Communication Interface: RS485;
3. Default Communication Parameters: Baud rate 9600bps, 8 data bits, 1 stop bit, no parity;
4. Device Address: If no special requirements are specified by the customer, the default address is 01, and on-site modification is supported;
5. Communication Frame Format

Address	Function Code	Data Field	CRC16
1byte	1byte	Nbyte	2byte

6. Function Code Definitions

Function Code	Name	Direction	Purpose	Single-access Limit
0x03/ 0x04	Read Holding Registers / Read Input Registers	Master → Slave	Read registers in each data area	Up to 125 registers
0x06	Write Single Holding Register	Master → Slave	Write a single parameter or trigger a command	1 register

Within a single register, data is stored in big-endian format (high byte first). For data of 32 bits or more spanning multiple registers, this specification uniformly adopts the ABCD order (high word first). Example: for the value 0x12345678, register REGN contains 0x1234 and register REGN+1 contains 0x5678.
The RTU frame is appended with a 2-byte CRC16 at the end. The checksum covers the slave address, the function code and the data field, and is transmitted low byte first. Algorithm: initial value 0xFFFF, polynomial 0xA001 (i.e., the standard Modbus CRC16).

7. Register Description

No.	Name	Register Address	Data Type	Length	Remarks
1	Operating Status	0x0000	Int16u	2	Bit0: Sensor status Bit1: Oil level high warning Bit2: Oil level low warning Bit3: Oil level protection trip status 1 = active, 0 = normal
2	Oil Level	0x0001-0x0002	Float	4	%
3	Slave Address	0x1000	Int16u	2	Valid range 1–247
4	Baud Rate	0x1001	Int16u	2	0: 2400 1: 4800 2: 9600 3: 19200 4: 38400 5: 115200
5	Parity	0x1002	Int16u	2	0 = None, 1 = Even, 2 = Odd
6	Stop Bits	0x1003	Int16u	2	0 = 1 stop bit 1 = 2 stop bits
7	RTC	0x1004-0x1006	BCD	6	Year, month, day, hour, minute and second, each occupying 1 byte
8	Protocol Version	0x1100	Int16u	2	0x0100 indicates protocol V1.0
9	Firmware Version	0x1102–0x1111	Int32u	4	High word: major version; low word: minor version
10	Hardware Version	0x1112–0x1121	Int32u	4	High word: major version; low word: minor version
11	Device Type	0x1200	Int16u	2	0x0003: Digital Transformer Oil Level Gauge
12	Device Model	0x1201–0x1210	char[32]	32	ASCII string, 32 characters, padded with 0x00 if shorter
13	Serial Number	0x1211–0x1220	char[32]	32	16 registers, 32 characters
14	Save Communication Parameters Command	0x1300	Int16u	2	Write 0xA55A to trigger saving of parameters to Flash
15	Apply Communication Parameters Command	0x1301	Int16u	2	Write 0x5AA5 to soft-reset the serial port and apply the new parameters
16	Oil Level High Warning Value	0x2000-0x2001	Float	4	Oil level value %
17	Oil Level Low Warning Value	0x2002-0x2003	Float	4	Oil level value %
18	Device Reset	0x2E00	Int16u	2	1: Device reset
19	Restore Factory Defaults Command	0x2F00	Int16u	2	1: Parameters restored to factory defaults

8.Operation Instructions

The oil level of the oil conservator can be observed through the display dial:
1. Minimum liquid level: When the pointer indicates the minimum position
2. Maximum liquid level: When the pointer indicates the maximum position
The micro-switch operates in advance at 5% of the full scale to indicate the minimum or maximum oil level in the oil conservator. When there are dual alarms for high and low oil levels, the second switch will operate simultaneously with the first one, or operate after a delay of 2.5% of the full scale. Customization is also available according to customer requirements.

9.Transportation and Storage

9.1.Transportation Requirements

1. Handle with care during product transportation. Throwing, impacting, stacking under heavy pressure are strictly prohibited;
2. The transportation packaging box shall be protected against rain, moisture and vibration to avoid direct invasion by rain and snow;
3. The stacking height during transportation shall not exceed the limit marked on the packaging box, and inversion and side placement are forbidden.

9.2.Storage Requirements

1. The product shall be stored in an indoor warehouse that is dry, ventilated, dust-free and free of corrosive gas;
2. The storage environment temperature ranges from -50°C to +90°C, relative humidity ⩽95%RH, no condensation;
3. The product shall be stored in its original package, placed away from the ground and walls to avoid moisture and collision;
4. Long-term idle equipment shall be inspected regularly to prevent sealing aging and component moisture damage.

10.Disclaimer

1. The content of this manual is the general standard description of the product. The manufacturer reserves the right to optimize the product structure, parameters and appearance without affecting the core performance of the product, and no separate notice will be given after the change;
2. Our company shall not bear any legal and economic responsibility for equipment damage, engineering losses and safety accidents caused by the user's failure to operate in accordance with the specifications of this manual, unauthorized modification and illegal use of the equipment;
3. The content of this manual is only for product use reference, and the technical parameters agreed in the contract have higher priority than the general parameters in this manual;
4. Without the authorization of our company, it is strictly prohibited to privately extract, tamper with or copy the content of this manual for commercial purposes.