



Side-Emitting



Front-Emitting

FLEXA - IP65 High Efficacy Wall Track Light with Selectable Front & Side Light Emission

※ Features:

- IP Rate:IP65;
- Working Temp:-20℃-+45℃;
- Lumens:Depends on the chip CRI, decorative cup color, etc..
- Lifetime: 50,000Hrs;
- Light source : Bridgelux
- Materials: Pure aluminum;
- With CE, RoHs;
- 5 years' warranty;
- Function: ON/OFF /DALI / Traic/ 0-10V...
- AC220-24V.



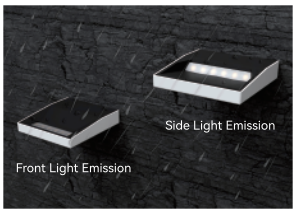

Flexa series features an IP65 dust and waterproof rating.

※ Application:

FLEXA Series combines wall lighting and track lighting in one versatile solution. With selectable front and side light emission, it provides direct illumination and soft wall-washing effects.Long-Range Beam Projection for Extended Lighting Coverage.The 20W compact design supports wall and ceiling rail installation for flexible commercial applications.

- Hotel, Lobby, Exclusive shop, Exhibition hall;
- Restaurant, Executive lounge, Living room;
- Meeting room,Multi-function hall;
- Villa,Luxuury,Boutique, shop.



Featuring a ball-bearing and magnetic mounting design for quick, secure, and reliable installation.

Jiangmen Zerund Lighting Co.,Ltd.

FactoryAdd.:No.43 Nange West Road, Hetang town
Pengjiang district,Jiangmen City, Guangdong, China
Email:info@zerundlighting.com
Tel.:(+86 750)3700 980.

www.zerundlighting.com

※Drawing

unit:mm





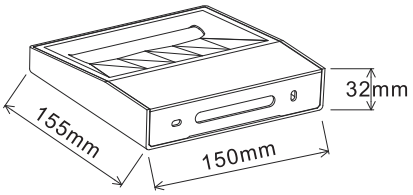

Z250135-20



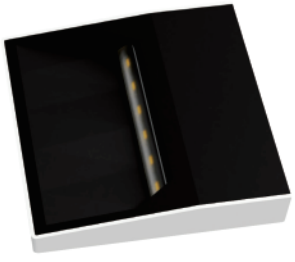

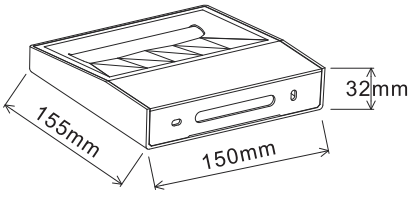

Z250136-20



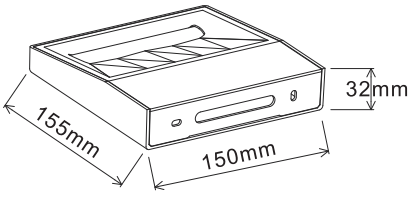

Z010113-20



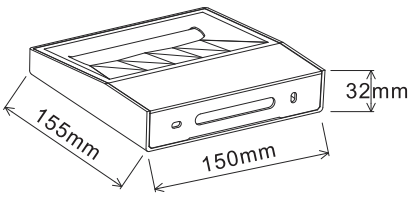

Z010114-20

Jiangmen Zerund Lighting Co.,Ltd.

FactoryAdd.:No.43 Nange West Road, Hetang town
Pengjiang district,Jiangmen City, Guangdong, China
Email:info@zerundlighting.com
Tel.:(+86 750)3700 980.

www.zerundlighting.com

※Parameters

CCT: 3000K-4000K-5000K-6000K

COB | CRI >80 | CRI >90

Item No	Dimension (mm)	Power	Lumen ±10%
Z250135-20	L150*W155*H32mm	20W	2400lm
Z250136-20	L150*W155*H32mm	20W	2400lm
Z010113-20	L150*W155*H32mm	20W	2400lm
Z010114-20	L150*W155*H32mm	20W	2400lm

※Color Option

Light body : White/Black..

※Application scenario








※installation information

Installation Instruction

Model: Z250135-20
Input: AC220-240V
Power: 20W

IP65

Safety Notice:

Please read this installation instruction before you install,and must install by professional.If do not follow installation instruction,maybe lead to damage,fire or body hurt.

1.When use product,please pay attention to voltage.

2.Please use our local standard identification cable,and must be higher than product voltage and constant current.

3.Please power off before wiring or any operation.

4.If need to replace parts or repair,please ensure use specified parts of supplier and changed by supplier or other professional .If not be handled properly,it will lead to electric shock or other harmful effects.

5.Cable connection parts of outdoor lighting fixture need to be ensured waterproof.

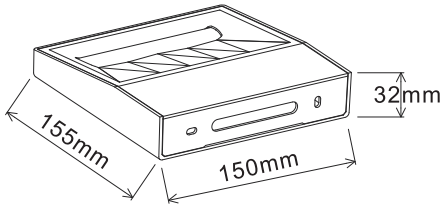

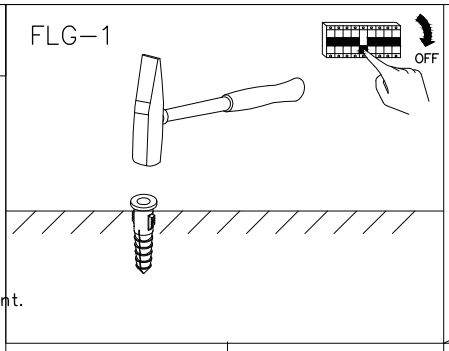

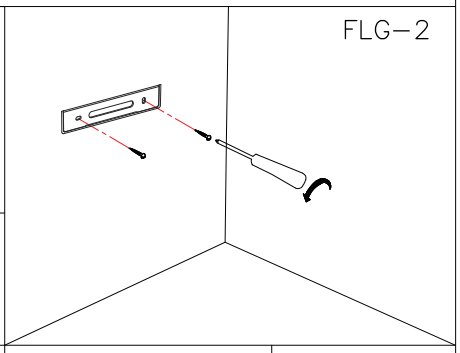

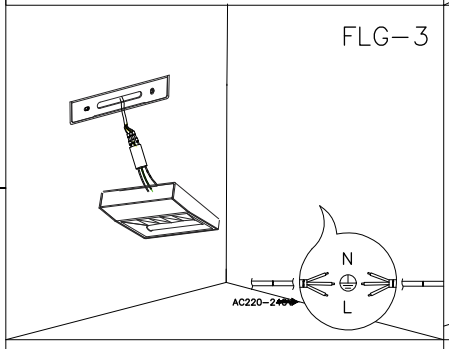

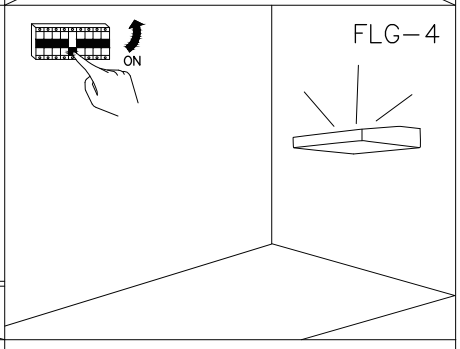

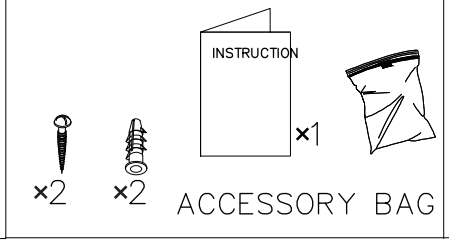

Installation Instruction

FLG-1

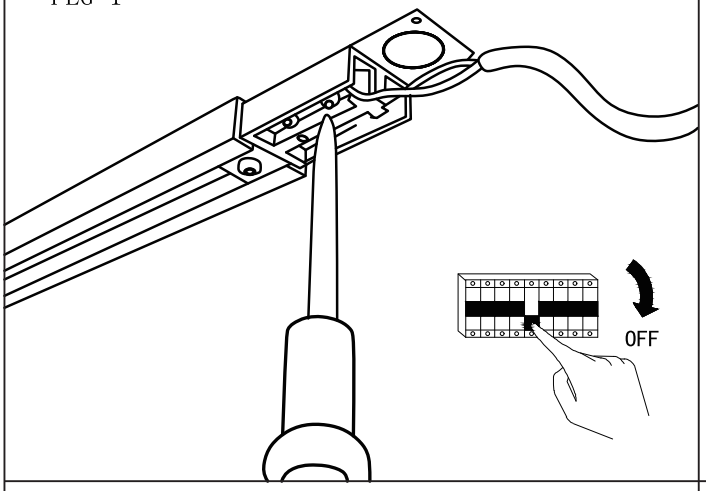

1.Before installation: Ensure the power is turned off. Secure the track to the ceiling, then connect the lamp wires to the pre-wired cables.

FLG-2

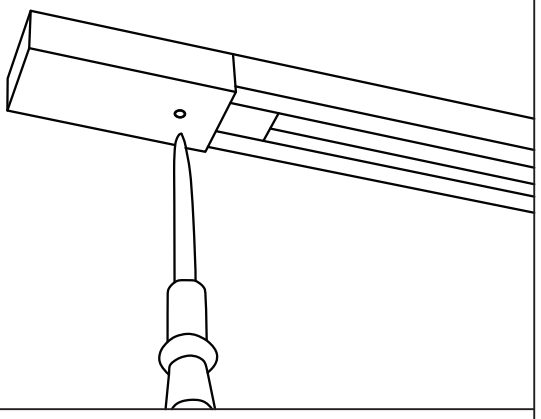

2.Install the junction box.

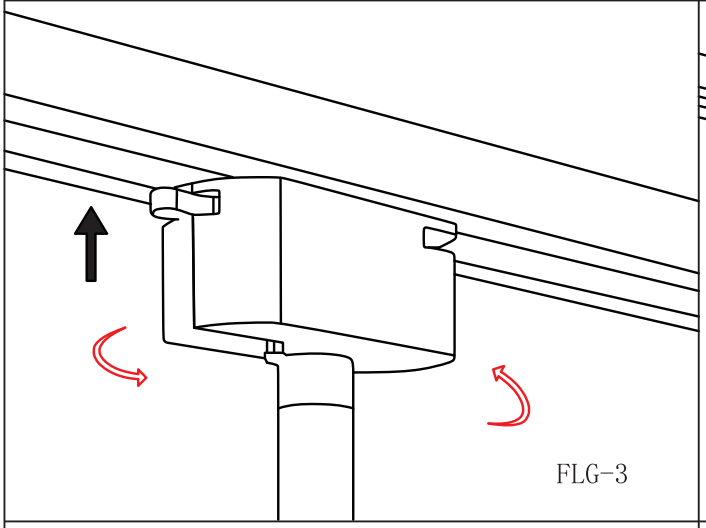

FLG-3

3.Clip the lamp body onto the track tightly, then fasten the buckle switch.

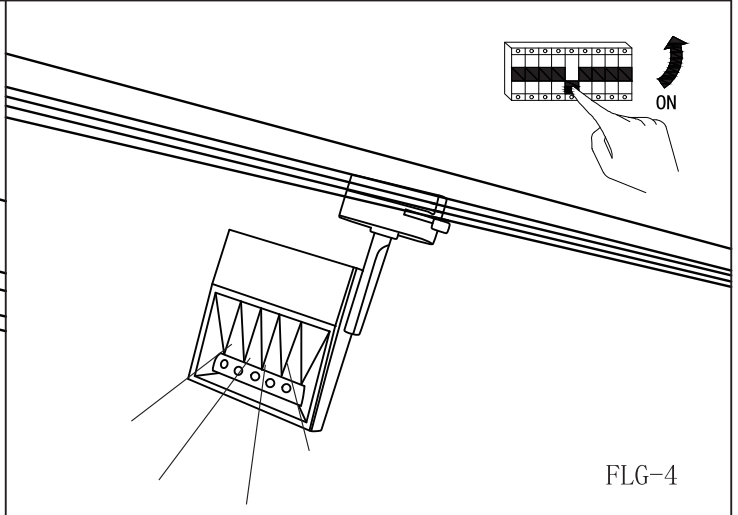

FLG-4

4.Installation completed.
Then turn on the switch to test.

Jiangmen Zerund Lighting Co.,Ltd.

FactoryAdd.:No.43 Nange West Road, Hetang town
Pengjiang district,Jiangmen City, Guangdong, China
Email:info@zerundlighting.com
Tel.:(+86 750)3700 980.

www.zerundlighting.com