庆道 Chindow

4th Generation Power Supply of ESP



Chindow Electric Co. ltd

Adress: 1602, building 115, No. 800, Ruilin Rd, Shanghai, China

Email: chindow@chindow-electric.com

Tel: +86 18616821052

Web:www.chindow-electric.com

PREFACE

The 4th generation high-frequency power supply, which adopts advanced DSP controlled IGBT sub-assembly for DC/AC inversion circuit, is used for electrostatic predicator system with output voltage ranging from 60/72/80/100/120kV output current 200～3200mA. The product features its advantages of stable output voltage, high operating frequency, high conversion efficiency, high power factor, etc., which can greatly enhance the performance of electrostatic precipitator system.



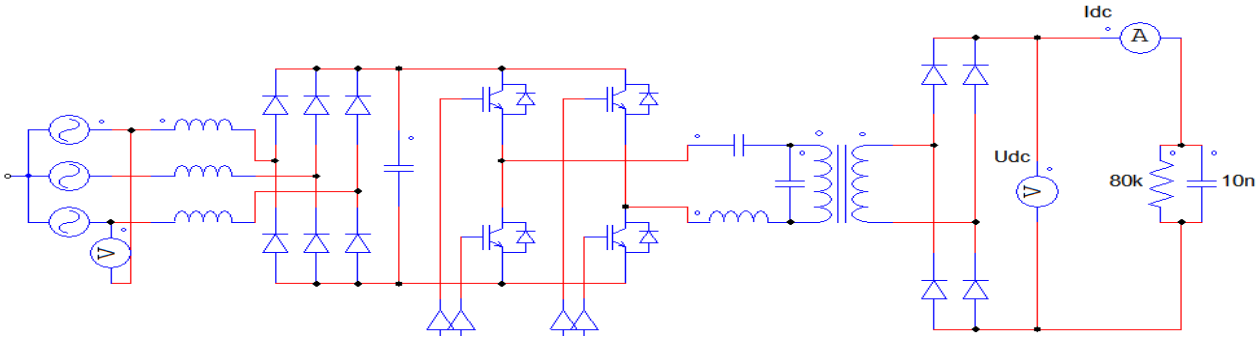

PERFORMANCE CHARACTERISTIC

1. DSP digital control technology is employed to enable better control
2. High operating frequency, up to 40kHz, small output voltage ripple, high dust removal efficiency;
3. High power conversion efficiency, up to 92% of full-load power conversion;
4. The power factor is high, over 0.92, which improves the utilization rate of electric energy;
5. Equipped with back-corona function Pulse mode function to tackle high resistivity of

APPLICABLE STANDARDS

- IEC60947-1:2007
- IEC61439-1:2009
- IEC 60076
- IEC61800

WORKING ENVIRONMENT

- Ambient temperature: -10℃~50℃
- Temperature for storage: -40℃~65℃
- Relative humidity: up to 99%
- Altitude above sea: 1000 meters

SPECIFICATIONS

60kV~90 kV Series				
Output Voltage /kV	60~90			
Output current/mA	200-400	400-800	800-1400	1400-2000
AC input voltage/V	3phase 380V±15%(45Hz~55Hz)			
Current accuracy	0.50%			
Conversion efficiency	≥88%			
Power factor	≥0.92			
Max output frequency	≥30kHz			
Operating mode	Spark rate control, Power saving mode, Pulse Mode			
Cooling method	Forced air cooling			
Transformer type	Oil-immersed			
Protection level	IP54			
Communication Interface	RS485/Internet			
Monitor/display	HMI			
Dimension W*H*D (mm)	615*1125*1300	700*1265*1350	900*1400*1500	1300*1417*1350
Weight (kg)	280	385	450	550

90kV~120kV Series				
Rated output voltage	90kV~120kV			
Rated output current	200~400mA	400-800mA	800-1400mA	1400~2000mA
Grid voltage	380/415Vac±15%			
Current accuracy	0.50%			
Conversion efficiency	≥92%			
Power factor	≥0.92			
Max output frequency	≥30kHz			
Operating mode	Spark rate control, Power saving mode, Pulse Mode			
Cooling method	Forced air cooling			
Transformer type	Oil-immersed			
Protection level	IP54			
Communication Interface	RS485/Internet			
Monitor /display	HMI			
Dimension W*H*D (mm)	700*1265*1450	700*1265*1450	900*1400*1600	1300*1417*1450
Weight (kg)	450	450	500	550

POWER SUPPLY SELECTION CHART (SUBJECT TO VARIATION WITH ESP REQUIREMENT)

Item	Unit	Parameter										
Exhaust air	m^3/h	50000	150000	250000	350000	450000	550000	650000	750000	850000	950000	1050000
Dust density inlet	mg/Nm^3	60	60	60	60	60	60	60	60	60	60	60
Mist density inlet	mg/Nm^3	≤75	≤75	≤75	≤75	≤75	≤75	≤75	≤75	≤75	≤75	≤75
Dust density outlet	mg/Nm^3	≤5	≤5	≤5	≤5	≤5	≤5	≤5	≤5	≤5	≤5	≤5
inner Diameter	mm	350	350	350	350	350	350	350	350	350	350	350
Electro field length	mm	6000	6000	6000	6000	6000	6000	6000	6000	6000	6000	6000
No. of positive poles	Pcs	55	164	273	382	490	600	710	755	856	957	1050
Material of positive poles		CFRP	CFRP	CFRP	CFRP	CFRP	CFRP	CFRP	CFRP	CFRP	CFRP	CFRP
Resistance from tube	Pa	≤300	≤300	≤300	≤300	≤300	≤300	≤300	≤300	≤300	≤300	≤300
Temperature of exhaust air	℃	50	50	50	50	50	50	50	50	50	50	50
No of electro fields	pc	1	1	1	1	1	1/2	1/2	2	2	2/4	2/4
Power source parameter	mA	400	800	1400	1800	2400	2800/1400	3200/1600	1800	2000	2400/1200	2800/1400

INDUSTRIES APPLICABLE

- Power plant
- Steel works
- Cement plant
- Petrochemical plant
- paper mill
- Pulp plant
- sugar plant
- Textile plant
- Pharmaceutical plant
- chemical plant
- Oil and gas
- Mining

